NVENT CADDY ROD LOCK SPRING STEEL STRUT NUT, 3/8" ROD

CATALOG NUMBER

6QCN



The QCN combines the unique properties of Spring Steel and CADDY "push-to-install" technology to create a snap in place strut nut with shockingly quick install of threaded rod or bolts. Use with a hex nut on threaded rod for fast install of prefabricated trapeze systems or with a truss head bolt for unbelievably fast wall mounting of electrical boxes and other services.

FEATURES

- Easy "push-to-install" design allows installers to simply push the threaded rod through the mounting hole, instantly holding it in position
- Works with slightly damaged threads and minor burrs on the threaded rod
- Perfect for quickly installing branch runs either at the load with standard strut or at the structure in combination with embedded strut
- Integrated design eliminates the need for finicky spring nuts and loose hardware, simplifying installation
- Quickly wall mount enclosures using common threaded bolts
- Designed for use with standard strut widths (1 5/8" or 41mm) both shallow and deep profiles

PRODUCT ATTRIBUTES

- Material: Spring Steel
- Finish: nVent CADDY Armour
- Rod Size: 3/8"
- Height: 0.720"
- A: 1 1/2"
- B: 1 1/2"
- Static Load 1: 110 lb
- Static Load 2: 30 lb
- Static Load 3: 50 lb

Torque: 20 in lb

ADDITIONAL PRODUCT DETAILS

The QCN requires a longer bolt than standard strut nuts. See instruction sheet for detailed information.

In order to function properly on shallow strut (21mm or 13/16" deep), the QCN should be installed directly above a slot hole.

DIAGRAMS

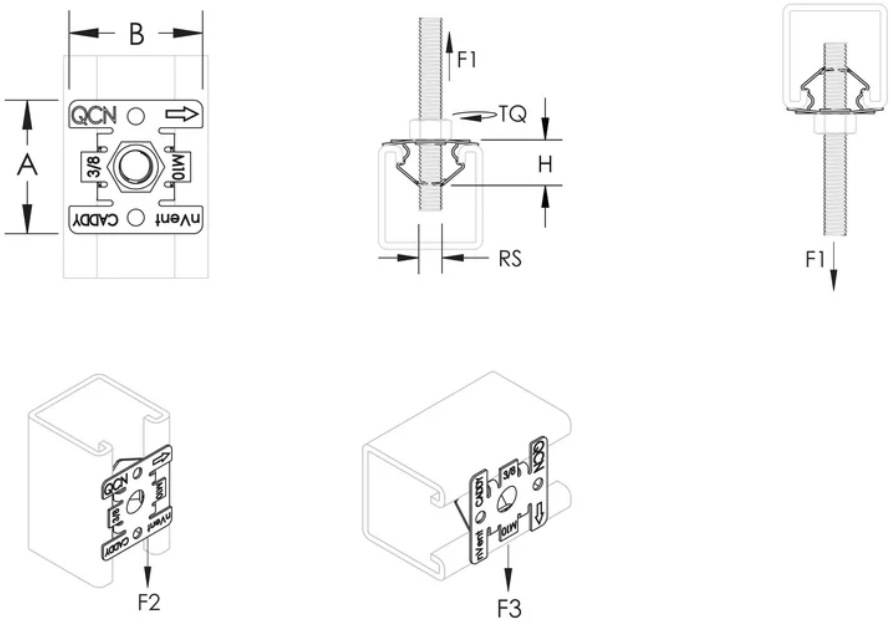

WARNING

nVent products shall be installed and used only as indicated in nVent's product instruction sheets and training materials. Instruction sheets are available at www.nvent.com and from your nVent customer service representative. Improper installation, misuse, misapplication or other failure to completely follow nVent's instructions and warnings may cause product malfunction, property damage, serious bodily injury and death and/or void your warranty.

North America
+1.800.753.9221
Option 1 – Customer Care
Option 2 – Technical Support

Europe
Netherlands:
+31 800-0200135
France:
+33 800 901 793

Europe
Germany:
800 1890272
Other Countries:
+31 13 5835404

APAC
Shanghai:
+ 86 21 2412 1618/19
Sydney:
+61 2 9751 8500

Our powerful portfolio of brands:
nVent.com **CADDY ERICO HOFFMAN RAYCHEM SCHROFF TRACER**

© 2023 nVent. All nVent marks and logos are owned or licensed by nVent Services GmbH or its affiliates. All other trademarks are the property of their respective owners.

nVent reserves the right to change specifications without notice.