Product data sheet
Characteristics

XCRE18
Limit switch, Limit switches XC Standard, XCR, metal stay put crossed rods lever square rod 6 mm, 2X(1NC+NO)

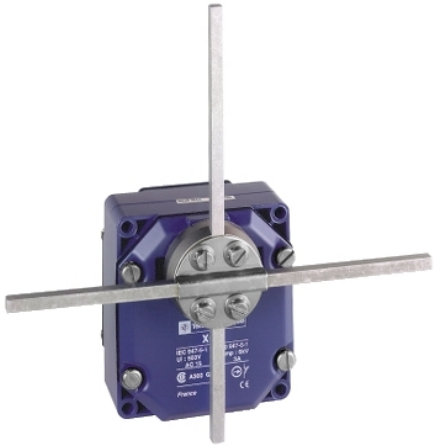

Main

Range of product	OsiSense XC
Series name	Special format
Product or component type	Limit switch
Product specific application	For hoisting and mechanical handling applications
Device short name	XCR
Sensor design	-
Body type	Fixed
Head type	Rotary head
Material	Metal
Fixing mode	By the body
Movement of operating head	Rotary
Type of operator	Stay put crossed rods lever metal square rod 6 mm
Type of approach	Lateral approach, 2 directions
Electrical connection	Screw-clamp terminals, clamping capacity: 1 x 0.34...2 x 1.5 mm²
Number of poles	4
Contacts type and composition	2 x (1 NC + 1 NO)
Contact operation	Snap action
Contact block per direction [control circuit]	2 per direction
Positive opening	With

Complementary

Body material	Zinc alloy
Switch actuation	By any moving part
Cable entry	1 entry tapped for Pg 13.5 cable gland 0.35…0.47 in (9…12 mm) NF C 68-300
Contacts insulation form	Zb
Number of steps	1
Positive opening minimum torque	6.20 lbf.in (0.7 N.m)
Minimum torque for tripping	5.31 lbf.in (0.6 N.m)
Minimum actuation speed	0.01 m/min
Maximum actuation speed	4.92 ft/s (1.5 m/s)
Maximum displacement angle	90 ° -90 °
Contact code designation	A300, AC-15 (Ue = 240 V), Ie = 3 A EN/IEC 60947-5-1 appendix A Q300, DC-13 (Ue = 250 V), Ie = 0.27 A EN/IEC 60947-5-1 appendix A
[Ui] rated insulation voltage	300 V conforming to UL 508 500 V 3)IEC 60947-1 500 V 3)VDE 0110 300 VCSA C22.2 No 14
Maximum resistance across terminals	25 MOhm IEC 60255-7 category 3
[Uimp] rated impulse withstand voltage	6 KV IEC 60664 6 kV IEC 60947-1
Short-circuit protection	10 A cartridge fuse, type gG

The information provided in this documentation contains general descriptions and/or technical characteristics of the performance of the products contained herein.
This documentation is not intended as a substitute for and is not to be used for determining suitability or reliability of these products for specific user applications.
It is the duty of any such user or integrator to perform the appropriate and complete risk analysis, evaluation and testing of the products with respect to the relevant specific application or use thereof.
Neither Schneider Electric Industries SAS nor any of its affiliates or subsidiaries shall be responsible or liable for misuse of the information contained herein.

Electrical durability	5000000 Cycles, DC-13, inductive, 120 V, 4 W 60 cyc/mn 0.5 IEC 60947-5-1 appendix C 5000000 Cycles, DC-13, inductive, 24 V, 7 W 60 cyc/mn 0.5 IEC 60947-5-1 appendix C 5000000 cycles, DC-13, inductive, 48 V, 10 W 60 cyc/mn 0.5 IEC 60947-5-1 appendix C
Mechanical durability	10000000 cycles
Width	3.35 in (85 mm)
Height	3.74 in (95 mm)
Maximum Depth	2.95 in (75 mm)
Net Weight	2.50 lb(US) (1.135 kg)
Terminals description ISO n°1	(13-14)NO (21-22)NC

Environment

Shock resistance	68 gn IEC 60068-2-27
Vibration resistance	9 gn 10…500 Hz)IEC 60068-2-6
IP degree of protection	IP54 conforming to IEC 60529
Overvoltage category	Class I conforming to IEC 61140 Class I NF C 20-030
Ambient air temperature for operation	-13…158 °F (-25…70 °C)
Ambient air temperature for storage	-40…158 °F (-40…70 °C)
Protective treatment	TC
Product certifications	CCC CSA
Standards	IEC 60204-1 CSA C22.2 No 14 IEC 60947-5-1 EN 60204-1 EN 60947-5-1 NF C 79-130

Ordering and shipping details

Category	22449 - LIMIT SWITCHES,ACCESSORIES
Discount Schedule	T
GTIN	00785901652182
Nbr. of units in pkg.	1
Package weight(Lbs)	0.36 lb(US) (0.16 kg)
Returnability	No
Country of origin	ID

Packing Units

Unit Type of Package 1	PCE
Package 1 Height	3.94 in (10 cm)
Package 1 width	4.33 in (11 cm)
Package 1 Length	8.46 in (21.5 cm)
Unit Type of Package 2	S02
Number of Units in Package 2	5
Package 2 Weight	12.76 lb(US) (5.787 kg)
Package 2 Height	5.91 in (15 cm)
Package 2 width	11.81 in (30 cm)
Package 2 Length	15.75 in (40 cm)
Unit Type of Package 3	P06
Number of Units in Package 3	80
Package 3 Weight	218.21 lb(US) (98.98 kg)
Package 3 Height	30.31 in (77 cm)
Package 3 width	23.62 in (60 cm)
Package 3 Length	31.50 in (80 cm)

Offer Sustainability

Sustainable offer status	Green Premium product
California proposition 65	WARNING: This product can expose you to chemicals including: Diisononyl phthalate (DINP), which is known to the State of California to cause cancer, and Di-isodecyl phthalate (DIDP), which is known to the State of California to cause birth defects or other reproductive harm. For more information go to www.P65Warnings.ca.gov
REACh Regulation	REACh Declaration
EU RoHS Directive	Pro-active compliance (Product out of EU RoHS legal scope) EU RoHS Declaration
Mercury free	Yes
RoHS exemption information	Yes
Environmental Disclosure	Product Environmental Profile

Contractual warranty

Warranty	18 months

Dimensions

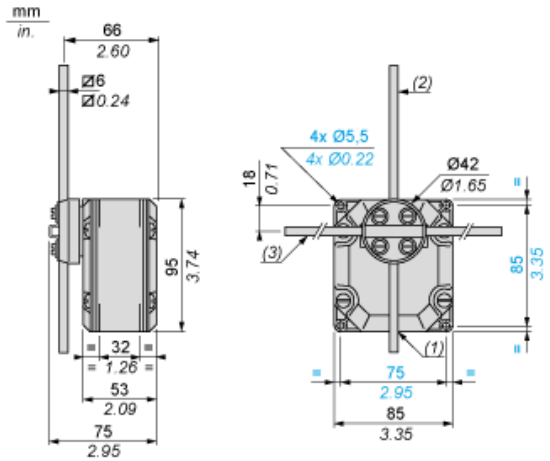

(1) 1 tapped entry for n° 13 cable gland.
(2) Rod length: 200 mm.
(3) Rod length: 200 mm.

Wiring Diagram

Two 2-pole NC + NO Snap Action

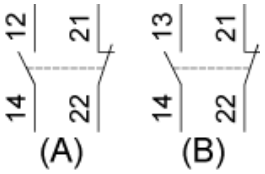

(A) 1st contact
(B) 2nd contact

Functionnal Diagram

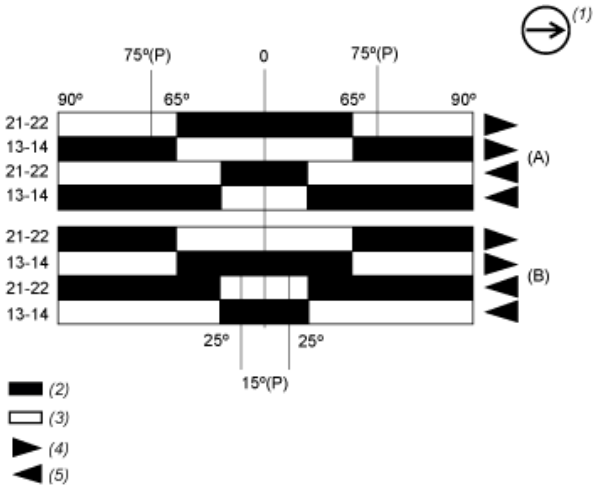

(P) Positive opening point
(A) 1st contact
(B) 2nd contact
(1) NC contact with positive opening operation
(2) Closed
(3) Open
(4) Tripping
(5) Resetting