

MERSEN

Expertise, our source of energy

SURGE
PROTECTION
SOLUTIONS

SURGE-TRAP® UL/CSA SURGE PROTECTIVE DEVICES







SURGE. TRANSIENT SPIKE. OVER VOLTAGE.

POWER RELATED FLUCTUATIONS COST U.S. COMPANIES MORE THAN $80 BILLION A YEAR

You have expensive equipment you rely on every day to meet your customers' needs. Down machines cost you time, money, and resources to get back on line. With a minimal investment, you can protect your sensitive control equipment or your entire facility from surge events. Mersen's Surge-Trap® product line offers a world-class suite of surge protection products designed to protect your facility from harmful and preventable surge damage.

Most surge spikes originate from within a customer's own facility. In fact, nearly 80% of all surge problems are directly attributed to power disturbances from within the facilities own equipment.

Any facility with motors stopping and starting, light load panels being turned on and off frequently, and other potential power disturbances is at risk for damage caused by a surge spike.

Of course, surges in electrical power can also originate outside of a facility, accounting for roughly 20% of facility transient problems. These surges may be caused by utility grid switching, lightning strikes, switching of capacitor banks, and electrical accidents.

Although many transients are not predictable, damage to a facility is preventable with a proven and tested surge protective device.

WHAT TYPES OF DAMAGE CAN A SURGE CAUSE TO A FACILITY?

- **Disruptive:** A surge enters an electronic component which interprets the valid logic command. The result: system lock-up, machine malfunction leading to faulty output, or corrupted files.
- **Dissipative:** A repetitive pulsing of short duration energy. The result: Long-term machine or system degradation leading to system replacement at earlier intervals.
- **Destructive:** A high-level energy surge that immediately results in equipment failure or destruction.

WHAT DOES A VOLTAGE SURGE LOOK LIKE?

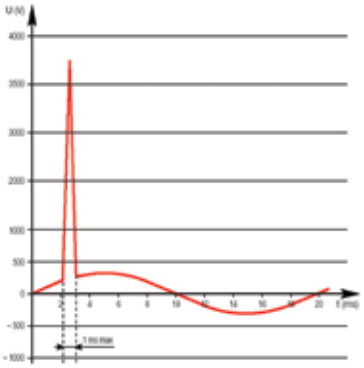

A voltage surge is a voltage level that is short in duration and can be several times greater than the system's normal operating AC RMS or DC voltage level.



FOR SURGE PROTECTION THAT COVERS EVERY VOLTAGE NEED WITHIN YOUR FACILITY

Metal Oxide Varistors (MOVs) are the most common and efficient technology used to protect equipment against damaging voltage spikes. However, while MOVs are efficient, they also degrade over time and possibly fail catastrophically when they reach end of life. In response, UL wrote standards to prevent fire risk while using MOVs. In 2009, UL 1449 3rd Edition was published*, and it transformed the way SPD manufacturers designed and manufactured their devices.

This is when Mersen's TPMOV became essential. This Mersen-patented invention was the first fail-safe Thermally Protected MOV (TPMOV) able to pass all UL 1449 3rd Edition tests as well as even more stringent tests applied by our customers. A few years later, Mersen TPMOVs are often imitated, but there is still no match to Mersen's technology.

Almost all Mersen SPDs feature our Thermally Protected MOV (TPMOV) technology, a fail-safe surge protection solution without the need for additional upstream protection. As a result, the Surge-Trap® product line offers the lowest cost, safest, and most reliable surge protection products on the market.

	MERSEN SURGE-TRAP	TYPICAL COMPETITOR
Surge Protective Device	$	$
Fuse	-	$
Fuseholder	-	$
Additional Wiring	-	$
Installation Cost	$	$$
Panel Footprint	-	$
Total Product Cost	$$	$$$$$$$

**UL 1449 4th Edition, effective March 2016, has superseded 3rd Edition, furthering the surge protection standards.*



- **Thermal MOV protection (TPMOV).** Thermal protection eliminates an MOV's hazardous and destructive failure modes (thermal runaway).
- **Overvoltage is solely managed by TPMOV technology.** This technology eliminates the need for additional wiring, fuse components, and costly installation time.
- **Prevention protection method.** Save MOV disconnection prior to MOV thermal runaway (as opposed to the containment method). No emission of fire, smoke, soot, or ionized gas.
- **Industry Innovation.** Mersen developed the first SPD product to pass UL1449 3rd edition safety testing, utilizing our patented TPMOV technology.
- **Highest Short-Circuit Current Rating (SCCR).** Surge-Trap products feature the highest SCCR rating available for any surge protective device, allowing for higher safety ratings and protection.
- **Isolated MOV.** Surge-Trap products provide fail-safe protection by isolating the MOV at the end of life.

Mersen offers surge protection products ranging from point-of-use protection to complete facility protection. The Surge-Trap product line represents the broadest suite of products for all your application requirements.

SURGE PROTECTION: TYPE DESIGNATIONS AND LOCATION CATEGORIES

Per the National Electrical Code® (NEC) and ANSI/UL 1449, SPDs are designated as follows:

Type 1: Permanently connected, intended for installation between the secondary of the service transformer and the line side of the service disconnect overcurrent device (service equipment). Their main purpose is to protect insulation levels of the electrical system against external surges caused by lightning or utility capacitor bank switching.

Type 2: Permanently connected, intended for installation on the load side of the service disconnect overcurrent device (service equipment), including branch panel locations. Their main purpose is to protect the sensitive electronics and microprocessor-based loads against residual lightning energy, motor generated surges, and other internally generated surge events.

Type 3: Point-of-utilization SPDs installed at a minimum conductor length of 10 meters (30 feet) from the electrical service panel to the point-of-utilization. Examples include cord connected, direct plug-in, and receptacle type SPDs.

The Institute of Electrical and Electronics Engineers (IEEE) has developed three categories that every facility can be divided into, location Category A, B, and C. See IEEE Standard C62.41.1 and C62.41.2 for further reference.

Category C: Outside overhead lines and service entrance (outdoor)

- Service drops from pole to building
- Runs between meter and panel
- Overhead lines to detached building
- Underground lines to well pump

Category B: Feeders, short branch circuits and service panels (indoor)

- Distribution panel devices
- Bus and feeder distribution
- Heavy appliance outlets with “short” connections to service entrance
- Lighting systems in large buildings

Category A: Outlets/receptacles and long branch circuits (indoor) (least severe)

- All outlets at more than 10m (30 ft) from Category B
- All outlets at more than 20m (60 ft) from Category C

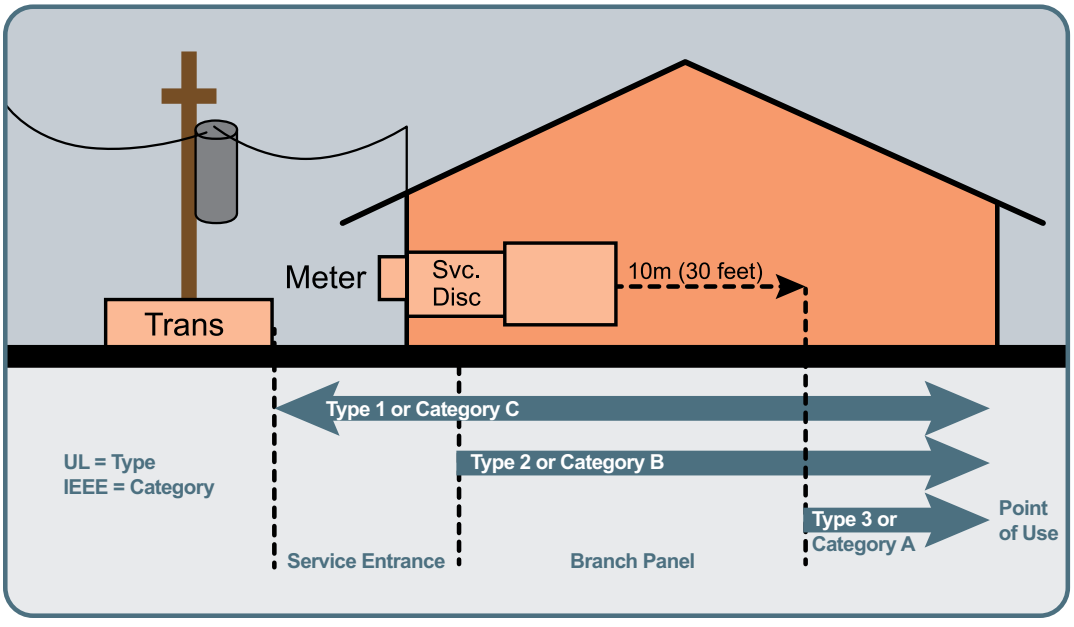

MAKE SURE YOUR INSTALLATION COMPLIES WITH UL 1449 4TH EDITION STANDARDS



UL can mark SPDs with two different classifications. A product that fully complies with the UL 1449 4th Edition type categories 1, 2, or 3 is marked with a small holograph label bearing the letters SPD. It also has the UL Listing Symbol.

When a product is compliant as a component assembly of UL 1449 4th Edition, UL labels it as a Recognized Component.

- Recognized components require additional safety evaluation for the application of the product and normally this type is installed at an OEM or an electrical panel manufacturer location.
- If it is integrated into a listed panel, a UL representative will review the application to confirm it meets safety requirements.
- The UL Recognition symbol is shown as a mirror image UR.

A UL Recognized product receives a detailed list of how it is different than a listed product. The UL test report provides the "Conditions of Acceptability." An OEM and UL field engineer requires this information to assure the SPD is applied safely.

Non-UL listed products can be misleading. Some SPD manufacturers self-test their units using their own opinion of what is important. They can state on the packaging that the SPD is UL 1449 compliant, but it's just their opinion. The use of these products is not in compliance with NEC regulations because they are not listed. Some independent third party testing labs will test to only portions of UL 1449 at the manufacturer's request. Look for the UL Listed logo or UL hologram logo to avoid this situation.

AN EXAMPLE OF A PRODUCT COMPLYING WITH UL 1449 4TH EDITION AND THE NEC:

If a maintenance person wanted to protect an existing machine panel against voltage surges, they might select a Mersen STXR480Y05. This is rated 480/277 volts supplied by a three-phase wye solidly grounded neutral source with not over 200kA short-circuit current. This is UL listed for a fully compliant field installation.

An OEM could select either the Mersen STXR480Y05 as above, or the Mersen STP4803PYGM DIN-Rail SPD, which is UL Recognized. If the UL Recognized product is chosen, the application must meet the UL "Conditions of Acceptability." In this example, mounting the SPD inside of the machine panel fully complies.

If there is any question about the veracity of a UL SPD status, UL has an easy verification procedure on their website at www.ul.com. At the bottom of the home page, click on the online Certifications Directory. Then enter the name of the manufacturer to verify the appropriate UL listing.

SURGE PROTECTION TERMS TO KNOW

There are many unique surge protection terms that are helpful to know. Below is a glossary of frequently used terms:

- **8/20 current impulse current:** Impulse with a virtual front time[1] of 8µs and a time to half-value[2] of 20µs.
- **Clamp Voltage:** The peak MOV terminal voltage measured with an applied 8/20 µs pulse of rated impulse current.
- **Metal Oxide Varistor (MOV):** An electronic component that is commonly used to divert excessive current to the ground and/or neutral lines.
- **Maximum Continuous Operating Voltage (MCOV):** The maximum rms voltage that may be continuously applied to the SPD for each connected mode.
- **Nominal Discharge Current Rating (I_n):** Peak value of the current through the SPD, selected by the manufacturer from a list of predetermined values, having a short-circuit current wave shape of 8/20 µs where the SPD remains functional after 15 surges.
- **Voltage Protection Rating (VPR):** A rating per UL 1449 4th Edition, signifying the rounded-up average measured limiting voltage of an SPD when the SPD is subjected to the surge produced by a 6kV, 3kA 8/20 µs combination waveform generator.
- **Short-Circuit Current Rating (SCCR):** The suitability of an SPD for use on an AC power circuit that is capable of delivering not more than a declared rms symmetrical current at a declared voltage during a short circuit condition.
- **Surge Protective Device (SPD):** A device that contains at least one nonlinear component and is listed to limit surge voltages and divert surge current.
- **Voltage Protection Level (U_p):** Maximum voltage to be expected at the SPD terminal when subjected to the SPD's nominal discharge current (I_n).

Note 1: The front time is defined according to IEC 60060-1 to be 1.25 x (t90 – t10).

Note 2: The time to half-value is defined as the time between the virtual origin and the 50% point on the tail.

NEW TO SURGE PROTECTION?

Mersen offers educational and collaborative product training annually with opportunity for hands-on experience to learn more about our products. For information on when the next training will be offered, please contact Mersen USA at 978.462.6662.

TABLE OF CONTENTS - PRODUCT SOLUTIONS

NEMA Products



DIN-Rail Products



In-Line Products



SPD Components

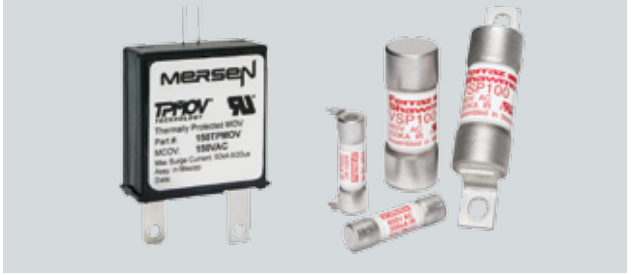

NEMA Products

Surge-Trap® STZ Series External SPD 8-10
Surge-Trap® STZ-R Series Internal SPD 11-13
Surge-Trap® STXH Series 14-15
Surge-Trap® STXR Series 16-17
Surge-Trap® STXP Series 18-19
Surge-Trap® STXT Series 20-21

DIN-Rail Products

Surge-Trap® STP Series 22-23, 26
Surge-Trap® ST Series 24-26
Surge-Trap® STPT2-PV Series for Photovoltaic 27
Surge-Trap® STMT23 Slim Series (IEC only) 28
Surge-Trap® STET23 Series with EMI Filter (IEC only) 29

In-line Products

Surge-Trap® STLB Series 30-31

SPD Components

Thermally Protected MOV TPMOV® Technology 32-33
MOV Protector Fuse VSP Series 34-35

SURGE-TRAP® STZ SERIES EXTERNAL SPD



SURGE PROTECTIVE DEVICE

NEMA DEVICES FOR ANSI/ UL 1449 TYPE 1 AND 2 APPLICATIONS

The Mersen flagship for facility-wide protection, The Surge-Trap® Type 1 STZ Series features surge capacities up to 450kA designed with Mersen's industry leading TPMOV® technology inside making it the safest and most reliable product on the market. Options include surge counter, through-the-door disconnect switch, audible alarm, dry contact, and EMI/RFI filtering. This external SPD can be installed on the line or load side of the service entrance.

FEATURES AND BENEFITS:

- Type 1 SPD for service entrance and facility-wide protection
- Ideal for new construction bid projects and specification as well as existing facility retrofit
- Designed with the industry leading Mersen TPMOV® Technology (internally fused)
- Available with accessory **Option A** for basic features (LED status indicators) and **Option B** for standard features (EMI/RFI filter, surge counter with reset, audible alarm and dry contacts with silence)
- Replaceable SPD module
- SPD module can be rotated 90 degrees depending on desired cable entry location
- Available with or without disconnect switch
- For use in ANSI/UL Type 1 or 2 SPD installations
- Up to 10 Modes of Protection (L-N, L-L, L-G, N-G)
- 15-year warranty

RATINGS:

- **Volts (U_n):** 120-480VAC
- **Nominal Discharge Current Rating (I_n):** 20kA
- **Surge Capacity (per phase):** 100, 150, 200, 300, 450kA
- **Short-Circuit Current Rating (SCCR):** 200kA
- **Optional EMI/RFI Filter:** Up to -50dB from 10kHz to 100MHz

APPROVALS:

- ANSI/UL 1449 4th Edition, Type 1 SPD, File E210793
- CSA C22.2, Type 1 SPD
- ANSI/IEEE C62.41.1, C62.41.2, C62.45
- UL96A Lightning Protection
- RoHS Compliant

Mersen
Expertise, our source of energy

GENERAL PRODUCT SPECIFICATIONS

Mounting:	Mounting feet	Relative Humidity Range:	0 to 95% non-condensing
Wiring:	Wire Lugs for 6-10 AWG copper	Visual LED End-of-Life Indicator:	Green = 67 to 100% Life
Enclosure:	NEMA 4 or NEMA 4X stainless steel		Yellow = 34 to 66% Life
Flammability:	UL94-5VA		Red = 0 to 33% Life
Operating & Storage Temperature:	-40°C to +85°C	Frequency:	50-60Hz

CATALOG NUMBER (INCLUDES SUFFIXES*)	SYSTEM VOLTAGE AND CONFIGURATION	I_n	MAXIMUM CONTINUOUS OPERATING VOLTAGE (MCOV, U_c)				VOLTAGE PROTECTION RATING (VPR) (UL 1449, 6kA, 3kV)			
			L-N	L-G	L-L	N-G*	L-N	L-G	L-L	N-G*
STZ240S…	240/120V Split Phase	20kA	150	150	300	150	700	700	1000	700
STZ120D…	120V 3-Phase DELTA	20kA	-	150	300	-	-	700	1000	-
STZ208Y…	208/120V 3-Phase WYE	20kA	150	150	300	150	700	700	1000	700
STZ480Y…	480/277V 3-Phase WYE	20kA	320	320	640	150	1200	1200	2000	700
STZ240D…	240V 3-Phase DELTA	20kA	-	320	640	-	-	1200	2000	-
STZ480D…	480V 3-Phase DELTA & HRG WYE	20kA	-	550	1100	-	-	1800	3000	-

*Part Number Selector (Don't see what you need? Please contact the factory)

STZ
Model Series

STZ

480Y
Voltage and System Configuration

- **240S:** 240/120V Split
- **120D:** 120V DELTA
- **208Y:** 208/120V WYE
- **480Y:** 480/277V WYE
- **240D:** 240V DELTA
- **480D:** 480V DELTA & HRG WYE

30
Surge Capacity

- **10:** 100kA
- **15:** 150kA
- **20:** 200kA
- **30:** 300kA
- **45:** 450kA

B
Package

- **A: Basic**
  - LED Status Indicators
  - Phase Loss Indication
- **B: Standard**
  - LED Status Indicators
  - Phase Loss Indication
  - Audible Alarm
  - Form C Dry Contacts
  - EMI/RFI Filter
  - Surge Counter

1
Enclosure

- **1:** NEMA 1/12/3R/4
- **X:** NEMA 4X

T
Disconnect

- **T:** UL98 Switch thru the door handle
- **BLANK:** None

Human-Machine Interface (HMI)

Option A: Basic



Option B: Standard



Note: Images above show HMI mounted on Internal SPD (STZ-R Series).
For the STZ External SPD, HMI will be mounted on the enclosure door.

Optional Form C Dry Contact and Audible Alarm (Included with Option B)

Form C Dry Contact
- 125VAC, 1A Resistive
- 30VDC, 2A General Purpose

NC = Normally Closed
COM = Common
NO = Normally Open

Audible Alarm
- Alarm sounds when any protection is lost.



Dimensions and Mounting Configurations

Without Disconnect Switch
12x12 Enclosure

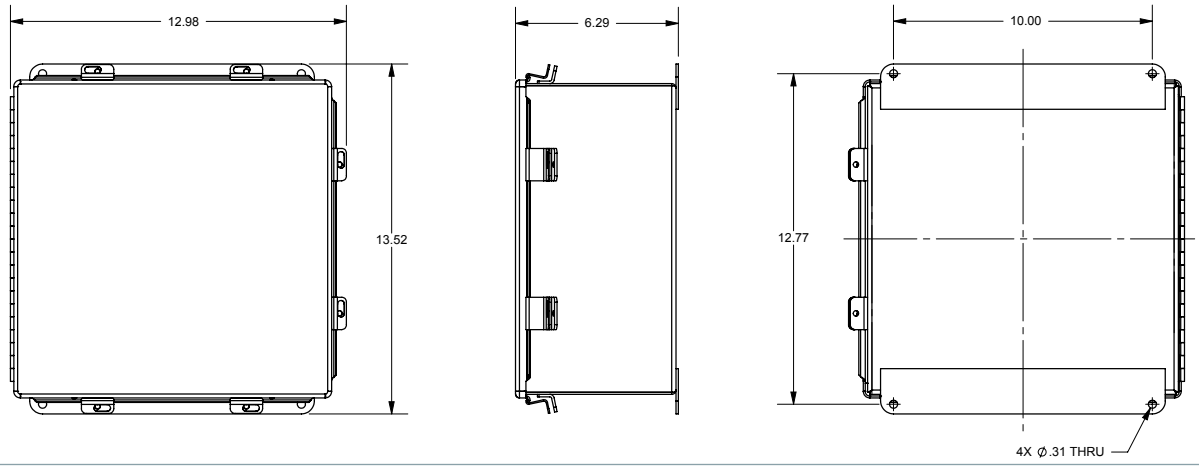

With Disconnect Switch
16x12 Enclosure

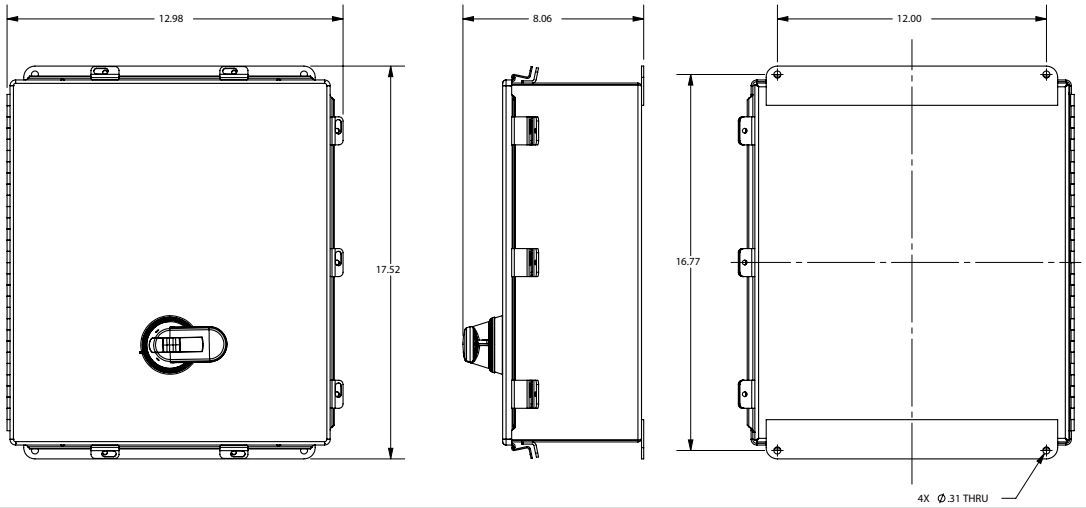

SURGE-TRAP® STZ-R SERIES INTERNAL SPD



SURGE PROTECTIVE DEVICE

NEMA DEVICES FOR ANSI/ UL 1449 TYPE 1 AND 2 APPLICATIONS

For facility-wide surge protection internal to existing equipment such as switchgear, panelboards, or motor control centers, the Surge-Trap® Type 1 STZ-R Series is the obvious choice. The STZ-R series features surge capacities up to 450kA designed with Mersen's industry-leading TPMOV® technology inside making it the safest and most reliable product on the market. Ideal for OEMs and panel builders, this internal SPD can be installed on the line or load side of the service entrance.

FEATURES AND BENEFITS:

- SPD intended to be installed internal to existing switchgear, panelboards, motor control centers, etc.
- Designed with the industry leading Mersen TPMOV® Technology (internally fused)
- Available with accessory **Option A** for basic features (LED status indicators) and **Option B** for standard features (EMI/RFI filter, surge counter with reset, audible alarm and dry contacts with silence)
- Local or remote human-machine interface (HMI) mounting options
- HMI can be rotated 90 degrees depending on desired cable entry location
- Available with or without disconnect switch
- For use in ANSI/UL Type 1 or 2 SPD installations
- Up to 10 Modes of Protection (L-N, L-L, L-G, N-G)
- 15-year warranty

RATINGS:

- **Volts (U_n):** 120-480VAC
- **Nominal Discharge Current Rating (I_n):** 20kA
- **Surge Capacity (per phase):** 100, 150, 200, 300, 450kA
- **Short-Circuit Current Rating (SCCR):** 200kA
- **Optional EMI/RFI Filter:** Up to -50dB from 10kHz to 100MHz

APPROVALS:

- ANSI/UL 1449 4th Edition, Type 1 SPD, File E210793
- CSA C22.2, Type 1 SPD
- ANSI/IEEE C62.41.1, C62.41.2, C62.45
- UL96A Lightning Protection
- RoHS Compliant

SURGE-TRAP® STZ-R SERIES INTERNAL SPD

GENERAL PRODUCT SPECIFICATIONS

Mounting:	Mounting feet	Relative Humidity Range:	0 to 95% non-condensing
Wiring:	Wire Lugs for 6-10 AWG copper	Visual LED End-of-Life Indicator:	Green = 67 to 100% Life
Flammability:	UL94-5VA		Yellow = 34 to 66% Life
Operating & Storage Temperature:	-40°C to +85°C		Red = 0 to 33% Life
		Frequency:	50-60Hz

CATALOG NUMBER (INCLUDES SUFFIXES*)	SYSTEM VOLTAGE AND CONFIGURATION	I_n	MAXIMUM CONTINUOUS OPERATING VOLTAGE (MCOV, U_c)				VOLTAGE PROTECTION RATING (VPR) (UL 1449, 6kA, 3kV)			
			L-N	L-G	L-L	N-G*	L-N	L-G	L-L	N-G*
STZ240S…	240/120V Split Phase	20kA	150	150	300	150	700	700	1000	700
STZ120D…	120V 3-Phase DELTA	20kA	-	150	300	-	-	700	1000	-
STZ208Y…	208/120V 3-Phase WYE	20kA	150	150	300	150	700	700	1000	700
STZ480Y…	480/277V 3-Phase WYE	20kA	320	320	640	150	1200	1200	2000	700
STZ240D…	240V 3-Phase DELTA	20kA	-	320	640	-	-	1200	2000	-
STZ480D…	480V 3-Phase DELTA & HRG WYE	20kA	-	550	1100	-	-	1800	3000	-

*Part Number Selector (Don't see what you need? Please contact the factory.)

STZ
Model Series

STZ

480Y
Voltage and System Configuration

- **240S:** 240/120V Split
- **120D:** 120V DELTA
- **208Y:** 208/120V WYE
- **480Y:** 480/277V WYE
- **240D:** 240V DELTA
- **480D:** 480V DELTA & HRG WYE

30
Surge Capacity

- **10:** 100kA
- **15:** 150kA
- **20:** 200kA
- **30:** 300kA
- **45:** 450kA

B
Package

- **A: Basic**
  - LED Status Indicators
  - Phase Loss Indication
- **B: Standard**
  - LED Status Indicators
  - Phase Loss Indication
  - Audible Alarm
  - Form C Dry Contacts
  - EMI/RFI Filter
  - Surge Counter

R
Enclosure

- **Q:** Internal SPD without HMI
- **R:** Internal SPD with HMI

U
Disconnect

- **U:** UL98 Switch
- **BLANK:** None

Human-Machine Interface (HMI)

Option A: Basic



Option B: Standard



Optional Form C Dry Contact and Audible Alarm (Included with Option B)

Form C Dry Contact
- 125VAC, 1A Resistive
- 30VDC, 2A General Purpose

NC = Normally Closed
COM = Common
NO = Normally Open

Audible Alarm
- Alarm sounds when any protection is lost.



Dimensions and Mounting Configurations

Without Disconnect Switch
12x12 Enclosure

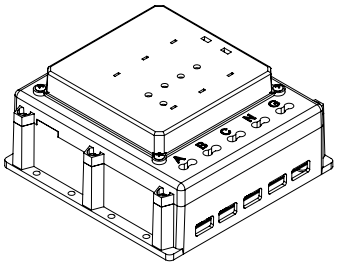

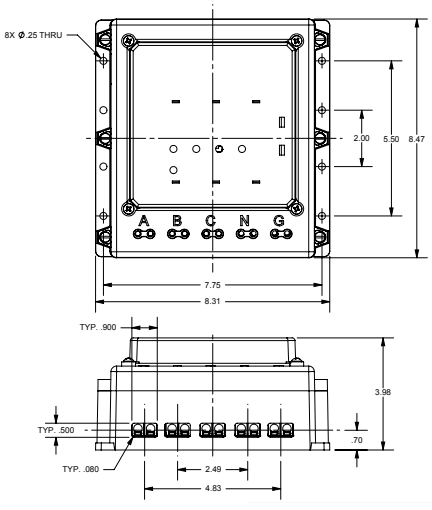

With Disconnect Switch
16x12 Enclosure

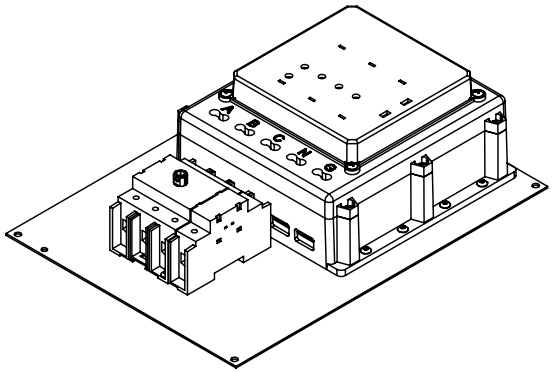

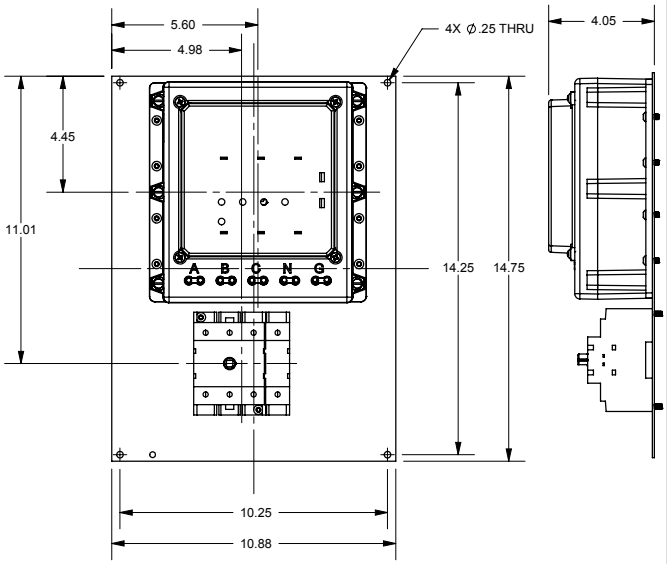

SURGE-TRAP® STXH SERIES



SURGE PROTECTIVE DEVICE

NEMA DEVICES FOR ANSI/ UL 1449 TYPE 1 AND 2 APPLICATIONS

The most compact of the STX series offering, the Surge-Trap® Type 1 STXH meets requirements for UL1449 4th Edition and is suitable for any 120/240VAC split phase application. The STXH Series SPD features TPMOV® technology inside making it the safest product available in its category. Its compact size, performance, and reliability are especially ideal for HVAC applications and direct mounting to air condition disconnect switches.

FEATURES AND BENEFITS:

- Designed with the industry leading Mersen TPMOV® Technology
- Compact footprint designed to mate with AC Disconnect Switches
- LED status indicator (ON = Good, OFF = Replace)
- NEMA 4X enclosure for outdoor or indoor use
- Fits 1/2" knockouts with 18" leads for easy installation
- For use in ANSI/UL Type 1 or 2 SPD installations
- 3 Modes of Protection (L-N, L-L)
- 3-year warranty

RATINGS:

- **Volts (U_n):** 120/240VAC Split Phase
- **Nominal Discharge Current Rating (I_n):** 20kA
- **Surge Capacity (per phase and per mode):** 50kA
- **Short-Circuit Current Rating (SCCR):** 200kA

APPROVALS:

- ANSI/UL 1449 4th Edition, Type 1 SPD, File E210793
- CSA C22.2, Type 1 SPD
- ANSI/IEEE C62.41.1, C62.41.2, C62.45
- UL96A Lightning Protection
- RoHS Compliant

Mersen
Expertise, our source of energy

SURGE-TRAP® STXH SERIES

GENERAL PRODUCT SPECIFICATIONS

Mounting:	1/2" – 14 threaded hub Includes sealing locking washer	Operating & Storage Temperature:	-40°C to +85°C
Wiring:	Pre-wired 18" 10AWG	Relative Humidity Range:	0 to 95% non-condensing
Enclosure:	NEMA 4X Non-metallic	Visual End-of-Life Indicator:	GREEN = OK, OUT = REPLACE
Flammability:	UL94-5VA	Frequency:	50-60Hz

CATALOG NUMBER (INCLUDES SUFFIXES*)	SYSTEM VOLTAGE AND CONFIGURATION	I_n	MAXIMUM CONTINUOUS OPERATING VOLTAGE (MCOV, U_c)		VOLTAGE PROTECTION RATING (VPR) (UL 1449, 6kA, 3kV)	
			L-N	L-L	L-N	L-L
STXH120P05	120V Single Phase	20kA	150	-	600	-
STXH240S05	240/120V Split Phase	20kA	150	300	600	1000

LED Status Indicator





1/2"-14 Mounting Hub

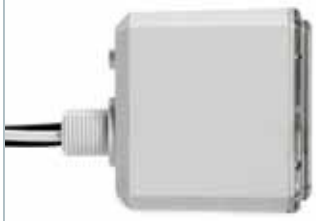

Dimensions and Mounting Configurations

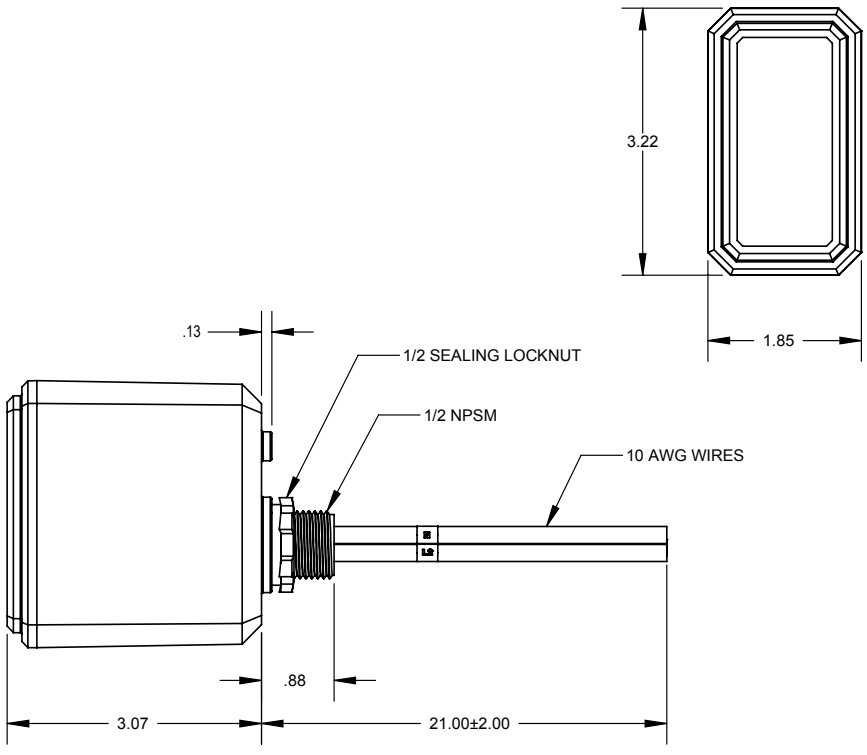

Ideal for Air Conditioning Disconnect Applications





SURGE-TRAP® STXR SERIES



SURGE PROTECTIVE DEVICE

NEMA DEVICES FOR ANSI/ UL 1449 TYPE 1 AND 2 APPLICATIONS

The most popular range in the STX series offering, the Surge-Trap® Type 1 STXR meets requirements for UL1449 4th Edition and is ideal for the replacement of obsolete surge arrestors. The STXR Series SPDs feature TPMOV® technology inside, making them the safest product available. With a small, compact design and line or load installation flexibility, the STXR series is the perfect fit for branch panel and/or individual equipment protection.

FEATURES AND BENEFITS:

- Designed with the industry leading Mersen TPMOV® Technology
- LED status indicator (ON = Good, OFF = Replace)
- NEMA 4X enclosure for outdoor or indoor use
- Fits 3/4" knockouts with 3' leads for easy installation
- Optional mounting bracket for surface mount applications
- Optional audible alarm and remote dry contacts
- For use in ANSI/UL Type 1 or 2 SPD installations
- Up to 10 modes of Protection (L-N, L-L, L-G optional, N-G optional)
- 5-year warranty

RATINGS:

- **Volts (U_n):** 120-600VAC
- **Nominal Discharge Current Rating (I_n):** 10-20kA
- **Surge Capacity (per phase and per mode):** 50kA
- **Short-Circuit Current Rating (SCCR):** 200kA

APPROVALS:

- ANSI/UL 1449 4th Edition, Type 1 SPD, File E210793
- CSA C22.2, Type 1 SPD
- ANSI/IEEE C62.41.1, C62.41.2, C62.45
- UL96A Lightning Protection
- RoHS Compliant

Mersen
Expertise, our source of energy

GENERAL PRODUCT SPECIFICATIONS

Mounting:	3/4" – 14 threaded hub Includes locking washer	Operating & Storage Temperature:	-40°C to +85°C
Wiring:	Pre-wired 3' (1m) 10AWG	Relative Humidity Range:	0 to 95% non-condensing
Enclosure:	NEMA 4X Non-metallic	Visual End-of-Life Indicator:	GREEN = OK, OUT = REPLACE
Flammability:	UL94-5VA	Frequency:	50-60Hz

CATALOG NUMBER (INCLUDES SUFFIXES*)	SYSTEM VOLTAGE AND CONFIGURATION	I_n	MAXIMUM CONTINUOUS OPERATING VOLTAGE (MCOV, U_c)				VOLTAGE PROTECTION RATING (VPR) (UL 1449, 6kA, 3kV)			
			L-N	L-G	L-L	N-G*	L-N	L-G	L-L	N-G*
STXR120P05	120V Single Phase	20kA	150	300	-	150	700	1200	-	600
STXR240P05	240V Single Phase	20kA	320	640	-	320	1200	1800	-	1000
STXR240S05	240/120V Split Phase	20kA	150	300	300	150	700	1200	1200	600
STXR480S05	480/240V Split Phase	20kA	320	640	640	320	1200	1800	2000	1000
STXR208Y05	208/120V 3-Phase WYE	20kA	150	300	300	150	700	1200	1200	600
STXR380Y05	380/220V 3-Phase WYE	20kA	320	640	640	320	1200	1800	2000	1000
STXR480Y05	480/277V 3-Phase WYE	20kA	320	470	640	150	1200	1800	2000	700
STXR600Y05	600/347V 3-Phase WYE	20kA	420	690	840	270	1500	2500	2500	1000
STXR240D05	240V 3-Phase DELTA	20kA	-	320	640	-	-	1200	2000	-
STXR480D05	480V 3-Phase DELTA & HRG WYE	10kA	-	550	1100	-	-	1800	3000	-
STXR600D05	600V 3-Phase DELTA	20kA	-	690	840	-	-	2000	2500	-
			L-N/ HL-N	L-G/ HL-G	L-L/ HL-L	N-G*	L-N/ HL-N	L-G/ HL-G	L-L/ HL-L	N-G*
STXR240H05	240/120V Hi-Leg DELTA	20kA	150/270	300/420	300/420	150	700/1.2k	1.2k/1.2k	2k/2k	600
STXR480H05	480/240V Hi-Leg DELTA	10kA	320/550	320/550	640/870	320	1.2/1.8k	1.2/1.8k	2k/2.5k	1000

*Suffixes:
Add Suffix "N" for N-G protection. Example: STXR208Y05N
Add Suffix "A" for Audible Alarm and Dry Contact. Example: STXR208Y05A
For both options, Example: STXR208Y05AN

CATALOG NUMBER	ACCESSORY DESCRIPTION
STXRMBK	STXR Mounting Bracket Kit. Includes (1) 90 degree bracket and (2) mounting screws

Optional Form C Dry Contact and Audible Alarm (Suffix "A")

Form C Dry Contact (Pre-wired 3' 18AWG)
125VAC, 1A Resistive
30VDC, 2A General Purpose

Gray = Normally Closed
Blue = Common
Red = Normally Open

Audible Alarm
Alarm sounds when any protection is lost



3/4"-14 Mounting Hub

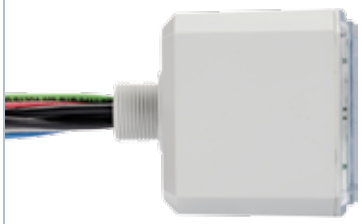

Dimensions and Mounting Configurations

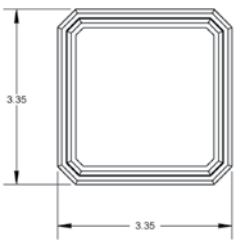

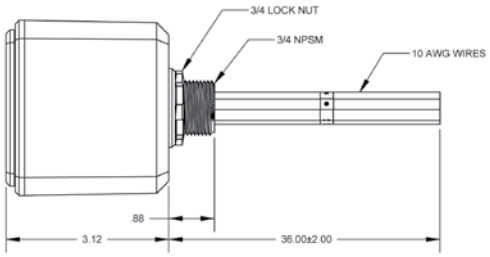

Bracket Mount Option

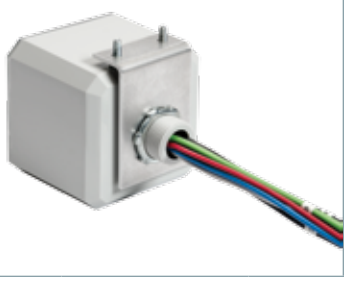



SURGE PROTECTIVE DEVICE

NEMA DEVICES FOR ANSI/ UL 1449 TYPE 1 AND 2 APPLICATIONS

The Surge-Trap® Type 1 STXP Series offers advanced performance and features over the STXR series including higher surge capacity and phase LED status indicators. The STXP meets requirements for UL1449 4th Edition and has been designed for additional mounting flexibility including mounting feet and flush-mount capability. The STXP features TPMOV® technology inside making it the safest product available. Installation can be done on the line or load side of a panel. The STXP is the perfect fit from service entrance all the way down to an important machine specific control panel.

FEATURES AND BENEFITS:

- Designed with the industry leading Mersen TPMOV® Technology (internally fused)
- Enhanced 100kA surge capacity for longer life and higher single impulse withstand
- LED status indicator (ON = Good, OFF = Replace)
- LED phase loss indicators (ON = Operational, OFF = Maintenance Required)
- NEMA 4X enclosure for outdoor or indoor use
- Mounting hub and mounting feet for installation flexibility
- Pre-wired with 3′ leads for easy installation
- Optional flush-mount kit for in-wall installation
- Optional audible alarm and remote dry contacts
- For use in ANSI/UL Type 1 or 2 SPD installations
- Up to 10 Modes of Protection (L-N, L-L, L-G, N-G)
- 10-year warranty

RATINGS:

- **Volts (U_n):** 120-600VAC
- **Nominal Discharge Current Rating (I_n):** 20kA
- **Surge Capacity (per phase):** 100kA
- **Short-Circuit Current Rating (SCCR):** 200kA

APPROVALS:

- ANSI/UL 1449 4th Edition, Type 1 SPD, File E210793
- CSA C22.2, Type 1 SPD
- ANSI/IEEE C62.41.1, C62.41.2, C62.45
- UL96A Lightning Protection
- RoHS Compliant

Mersen
Expertise, our source of energy

GENERAL PRODUCT SPECIFICATIONS

Mounting:	Female 3/4" – 14 threaded hub Mounting feet with 0.125" diameter holes	Operating & Storage Temperature:	-40°C to +85°C
Wiring:	Pre-wired 3' (1m) 10AWG	Relative Humidity Range:	0 to 95% non-condensing
Enclosure:	NEMA 4X Non-metallic	Visual End-of-Life Indicator:	GREEN = OK, OUT = REPLACE
Flammability:	UL94-5VA	Frequency:	50-60Hz

CATALOG NUMBER (INCLUDES SUFFIXES*)	SYSTEM VOLTAGE AND CONFIGURATION	I_n	MAXIMUM CONTINUOUS OPERATING VOLTAGE (MCOV, U_c)				VOLTAGE PROTECTION RATING (VPR) (UL 1449, 6kA, 3kV)			
			L-N	L-G	L-L	N-G*	L-N	L-G	L-L	N-G*
STXP120P10	120V Single Phase	20kA	150	150	-	150	700	700	-	600
STXP240S10	240/120V Split Phase	20kA	150	150	300	150	700	700	1000	600
STXP480S10	480/240V Split Phase	20kA	320	320	640	150	1200	1200	2000	600
STXP208Y10	208/120V 3-Phase WYE	20kA	150	150	300	150	700	700	1000	600
STXP380Y10	380/220V 3-Phase WYE	20kA	320	320	640	150	1200	1200	2000	600
STXP480Y10	480/277V 3-Phase WYE	20kA	320	320	640	150	1200	1200	2000	600
STXP600Y10	600/347V 3-Phase WYE	20kA	420	420	840	275	1200	1500	2000	1000
STXP240D10	240V 3-Phase DELTA	20kA	-	320	640	-	-	1200	2000	-
STXP480D10	480V 3-Phase DELTA & HRG WYE	20kA	-	550	1100	-	-	1800	3000	-
STXP600D05 (50kA)	600V 3-Phase DELTA	20kA	-	690	695	-	-	2000	2500	-
			L-N/ HL-N	L-G/ HL-G	L-L/ HL-L	N-G*	L-N/ HL-N	L-G/ HL-G	L-L/ HL-L	N-G*
STXP240H10	240/120V Hi-Leg DELTA	20kA	150/275	150/275	300/425	150	700/1.2k	700/1.2k	1.0k/2000	600
STXP480H10	480/240V Hi-Leg DELTA	20kA	320/550	320/550	640/870	320	1.2k/1.8k	1.2k/1.8k	1.8k/2.5k	1000
*Suffixes:	Add Suffix "A" for Audible Alarm and Dry Contact. Example: STXP208Y10A									

CATALOG NUMBER	ACCESSORY DESCRIPTION
STXPFMK	STXP Flush Mount Kit. Includes (1) mounting plate and (3) mounting screws

Optional Form C Dry Contact and Audible Alarm (Suffix "A")

Form C Dry Contact (Pre-wired 3' 18AWG)
125VAC, 1A Resistive
30VDC, 2A General Purpose

Gray = Normally Closed
Blue = Common
Red = Normally Open

Audible Alarm
Alarm sounds when any protection is lost

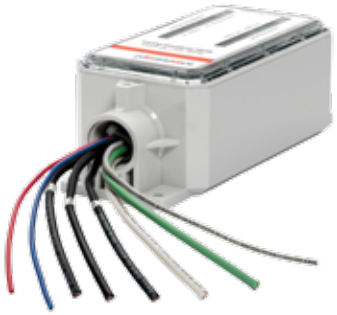

3/4"-14 Female Mounting Hub

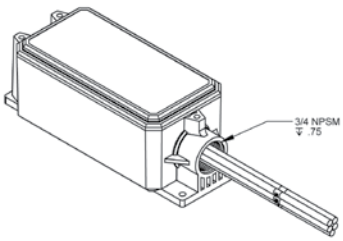

Dimensions and Mounting Configurations

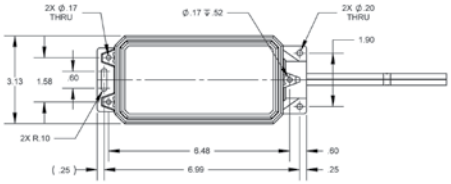

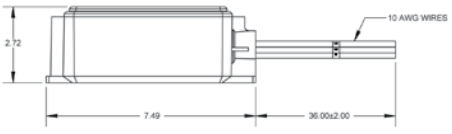

Flush Mount Option



SURGE-TRAP® STXT SERIES



SURGE PROTECTIVE DEVICE

NEMA DEVICES FOR ANSI/ UL 1449 TYPE 1 AND 2 APPLICATIONS

The most advanced of the STX series, the Surge-Trap® Type 1 STXT Series comes standard with EMI/RFI Filtering and surge capacities up to 200kA. The STXT features TPMOV® technology inside, making it the safest product available. With line or load side installation flexibility, this unit is a great fit from the service entrance all the way down to each distribution and/or branch panel.

FEATURES AND BENEFITS:

- Designed with the industry leading Mersen TPMOV® Technology (internally fused)
- Premium 200kA surge capacity for longer life and higher single impulse withstand
- Includes EMI/RFI filter for cleaner attenuation
- LED status indicator (ON = Good, OFF = Replace)
- LED phase loss indicators (ON = Operational, OFF = Maintenance Required)
- NEMA 4X enclosure for outdoor or indoor use
- Mounting hub and mounting feet for installation flexibility
- Optional audible alarm and remote dry contacts
- For use in ANSI/UL Type 1 or 2 SPD installations
- Up to 10 Modes of Protection (L-N, L-L, L-G, N-G)
- 10-year warranty

RATINGS:

- **Volts (U_n):** 120-600VAC
- **Nominal Discharge Current Rating (I_n):** 20kA
- **Surge Capacity (per phase):** 100kA or 200kA
- **Short-Circuit Current Rating (SCCR):** 200kA
- **EMI/RFI Filter:** Up to -50dB from 10kHz to 100MHz

APPROVALS:

- ANSI/UL 1449 4th Edition, Type 1 SPD, File E210793
- CSA C22.2, Type 1 SPD
- ANSI/IEEE C62.41.1, C62.41.2, C62.45
- UL96A Lightning Protection
- RoHS Compliant

Mersen
Expertise, our source of energy

GENERAL PRODUCT SPECIFICATIONS

Mounting:	Female 3/4" – 14 threaded hub Mounting feet with 0.25" diameter holes	Operating & Storage Temperature:	-40°C to +85°C
Wiring:	Wire Lugs for 8 AWG copper	Relative Humidity Range:	0 to 95% non-condensing
Enclosure:	NEMA 4X Non-metallic	Visual End-of-Life Indicator:	GREEN = OK, OUT = REPLACE
Flammability:	UL94-5VA	Frequency:	50-60Hz

CATALOG NUMBER (INCLUDES SUFFIXES*)	SYSTEM VOLTAGE AND CONFIGURATION	I_n	MAXIMUM CONTINUOUS OPERATING VOLTAGE (MCOV, U_c)				VOLTAGE PROTECTION RATING (VPR) (UL 1449, 6kA, 3kV)			
			L-N	L-G	L-L	N-G*	L-N	L-G	L-L	N-G*
STXT120P20	120V Single Phase	20kA	150	150	-	150	700	700	-	700
STXT240S20	240/120V Split Phase	20kA	150	150	300	150	700	700	1000	700
STXT480S20	480/240V Split Phase	20kA	320	320	640	150	1200	1200	2000	700
STXT208Y20	208/120V 3-Phase WYE	20kA	150	150	300	150	700	700	1000	700
STXT380Y20	380/220V 3-Phase WYE	20kA	320	320	640	150	1200	1200	2000	700
STXT480Y20	480/277V 3-Phase WYE	20kA	320	320	640	150	1200	1200	2000	700
STXT600Y20	600/347V 3-Phase WYE	20kA	420	420	840	275	1500	1500	2500	1200
STXT240D20	240V 3-Phase DELTA	20kA	-	320	640	-	-	1200	2000	-
STXT480D20	480V 3-Phase DELTA & HRG WYE	20kA	-	550	1100	-	-	1800	3000	-
STXT600D10	600V 3-Phase DELTA	20kA	-	695	840	-	-	2500	2500	-
			L-N/ HL-N	L-G/ HL-G	L-L/ HL-L	N-G*	L-N/ HL-N	L-G/ HL-G	L-L/ HL-L	N-G*
STXT240H20	240/120V Hi-Leg DELTA	20kA	150/275	150/275	300/425	150	700/1.2k	700/1.2k	1.0k/2000	700
STXT480H20	480/240V Hi-Leg DELTA	20kA	320/550	320/550	640/870	320	1.2k/1.8k	1.2k/1.8k	2.0k/2.5k	1200
*Suffixes:	Add Suffix "A" for Audible Alarm and Dry Contact. Example: STXP208Y10A For 100kA Surge Capacity models, substitute "10" for "20." Example: STXT208Y10									

Optional Form C Dry Contact and Audible Alarm (Suffix "A")

Form C Dry Contact

125VAC, 1A Resistive
30VDC, 2A General Purpose

COM = Common
NO = Normally Open

Audible Alarm

Alarm sounds when any protection is lost



3/4"-14 Female Mounting Hub



Dimensions and Mounting Configurations

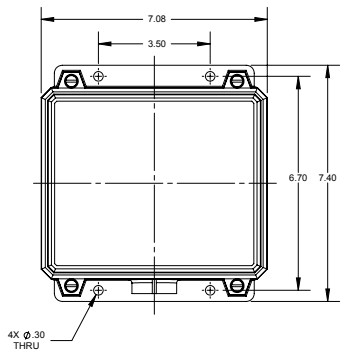

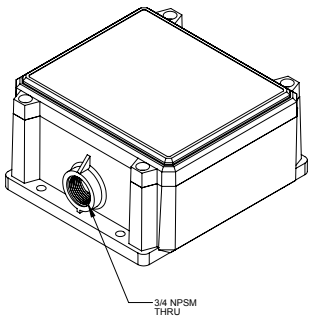

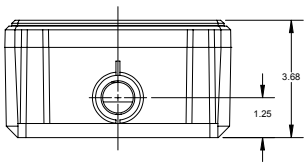



SURGE PROTECTIVE DEVICE

DIN-RAIL PLUGGABLE SPD FOR ANSI/UL 1449 TYPE 1 AND 2 APPLICATIONS

Surge-Trap® Pluggable Surge Protective Device (SPD) is a no-fuse, fail-safe surge suppressor featuring Mersen's patented TPMOV® technology inside. UL 1449 4th Edition approved, it is DIN-rail mountable featuring a fail-safe self-protected design, visual indicator, and a small footprint. A remote indicator option provides status to critical control circuitry. The Surge-Trap Pluggable SPD has a high short circuit rating and a thermally protected MOV, which eliminates the need for additional overcurrent protection devices.

FEATURES AND BENEFITS:

- Easy installation or retrofit
- DIN-rail mountable
- Fail-safe, self-protected design
- Remote indicator
- Visual indicator
- IP20 finger-safe design
- Small footprint
- No additional overcurrent protection devices required
- Easy to replace modules
- 2-year warranty

RATINGS:

- **Volts (U_n):** 120-690VAC
- **Nominal Discharge Current Rating (I_n):** 10-20kA
- **Surge Capacity:** 50kA
- **Short-Circuit Current Rating (SCCR):** 200kA

APPROVALS:

- ANSI/UL 1449 4th Edition, Type 1 Component Assembly SPD, File E210793
- ANSI/IEEE C62.41.1, C62.41.2, C62.45
- RoHS Compliant

Mersen
Expertise, our source of energy

GENERAL PRODUCT SPECIFICATIONS

Mounting:	35mm DIN-Rail	Operating & Storage Temperature:	-40°C to + 85°C
Wire Range:	6-14AWG Solid / Stranded CU	Visual End of Life Indicator:	RED = End of Life
Terminal Torque:	14.75 lbs-in	Remote End of Life Indicator:	NO/NC Dry Contact
Degree of Protection:	IP 20	Frequency:	50-60 Hz
Flammability:	UL94 V0		

1-POLE, SINGLE-PHASE, 2-WIRE

CATALOG NUMBER	NOMINAL VOLTAGE (VAC)	MAXIMUM CONTINUOUS OPERATING VOLTAGE (MCOV, VAC)				VOLTAGE PROTECTION RATING (VPR, VAC)				REPLACEMENT PLUG	I_n (kA)
		L-N	L-G	N-G	L-L	L-N	L-G	N-G	L-L	L-1	
STP1201PGM	120	180	180	-	-	600	600	-	-	SP180U	20
STP2301PGM	240	275	275	-	-	900	900	-	-	SP275U	20
STP2771PGM	277	320	320	-	-	1000	1000	-	-	SP320U	20
STP3471PGM	347	420	420	-	-	1500	1500	-	-	SP420U	10
STP6001PGM*	600	650	650	-	-	2000	2000	-	-	SP660U	10

*SCCR = 42kA

2-POLE, SPLIT-PHASE, 3-WIRE

CATALOG NUMBER	NOMINAL VOLTAGE (VAC)	MAXIMUM CONTINUOUS OPERATING VOLTAGE (MCOV, VAC)				VOLTAGE PROTECTION RATING (VPR, VAC)				REPLACEMENT PLUG	I_n (kA)
		L-N	L-G	N-G	L-L	L-N	L-G	N-G	L-L	L1, L2	
STP240SPGM	120/240	180	180	-	360	600	600	-	1200	SP180U	20
STP480SPGM	240/480	275	275	-	550	900	900	-	1800	SP275U	20

3-POLE, 3-PHASE DELTA, 4-WIRE

CATALOG NUMBER	NOMINAL VOLTAGE (VAC)	MAXIMUM CONTINUOUS OPERATING VOLTAGE (MCOV, VAC)				VOLTAGE PROTECTION RATING (VPR, VAC)				REPLACEMENT PLUG	I_n (kA)
		L-N	L-G	N-G	L-L	L-N	L-G	N-G	L-L	L1, L2, L3	
STP2403PDGM	240	275	275	-	550	900	900	-	1800	SP275U	20
STP4803PDGM	480	550	550	-	1100	1800	1800	-	3000	SP550U	10

3-POLE, 3-PHASE WYE, 4-WIRE

CATALOG NUMBER	NOMINAL VOLTAGE (VAC)	MAXIMUM CONTINUOUS OPERATING VOLTAGE (MCOV, VAC)				VOLTAGE PROTECTION RATING (VPR, VAC)				REPLACEMENT PLUG	I_n (kA)
		L-N	L-G	N-G	L-L	L-N	L-G	N-G	L-L	L1, L2, L3	
STP2083PYGM	120/208	180	180	-	360	600	600	-	1200	SP180U	20
STP4803PYGM	277/480	320	320	-	640	1000	1000	-	1800	SP320U	20
STP6003PYGM	347/600	420	420	-	840	1500	1500	-	2500	SP420U	10
STP6903PYGM	400/690	440	440	-	880	1500	1500	-	2500	SP440U	20

4-POLE, 3-PHASE WYE, 5-WIRE, INCLUDING N-G MODE

CATALOG NUMBER	NOMINAL VOLTAGE (VAC)	MAXIMUM CONTINUOUS OPERATING VOLTAGE (MCOV, VAC)				VOLTAGE PROTECTION RATING (VPR, VAC)				REPLACEMENT PLUG		I_n (kA)
		L-N	L-G	N-G	L-L	L-N	L-G	N-G	L-L	L1, L2, L3	N-G	
STP2083PYM	120/208	180	180	180	360	600	1200	600	1200	SP180U	SP180U	20
STP4803PYM	277/480	320	500	180	640	1000	1500	600	1800	SP320U	SP180U	20
STP6003PYM	347/600	420	695	275	840	1500	2000	600	2500	SP420U	SP275U	10
STP6903PYM	400/690	440	760	320	880	1500	2000	1000	2500	SP440U	SP320U	20

4-POLE, 3-PHASE DELTA HIGH-LEG, 5-WIRE, INCLUDING N-G MODE

CATALOG NUMBER	NOMINAL VOLTAGE (VAC)	MAXIMUM CONTINUOUS OPERATING VOLTAGE (MCOV, VAC)				VOLTAGE PROTECTION RATING (VPR, VAC)				REPLACEMENT PLUG			I_n (kA)
		L-N	L-G	N-G	L-L	L-N	L-G	N-G	L-L	L1, L3	L2	N-G	
STP2403PHM	120/240	360	180	455	275	1200	600	1500	900	SP180U	SP275U	SP180U	20
STP4803PHM	240/480	550/455	275/180	825/730	550	1.8k/1.5k	900/600	2.5k/2.0k	1800	SP275U	SP550U	SP180U	10



SURGE PROTECTIVE DEVICE

DIN-RAIL MODULAR SPD FOR ANSI/UL 1449 TYPE 1 AND 2 APPLICATIONS

Surge-Trap® Modular Surge Protective Device (SPD) is a no-fuse, fail-safe surge suppressor featuring Mersen's patented TPMOV® technology inside. UL 1449 4th Edition approved, it is DIN-rail mountable featuring a fail-safe self-protected design, visual indicator, and a small footprint. A remote indicator option provides status to critical control circuitry. The Surge-Trap Modular SPD has a high short circuit rating and a thermally protected MOV, which eliminates the need for additional overcurrent protection devices.

FEATURES AND BENEFITS:

- Easy installation or retrofit
- DIN-rail mountable
- Fail-safe, self-protected design
- Remote indicator (optional)
- Visual indicator
- IP20 finger-safe design
- Small footprint
- No additional overcurrent protection devices required
- 2-year warranty

RATINGS:

- **Volts (U_n):** 120-690VAC
- **Nominal Discharge Current Rating (I_n):** 20kA
- **Surge Capacity (per phase and per mode):** 50kA
- **Short-Circuit Current Rating (SCCR):** 200kA

APPROVALS:

- ANSI/UL 1449 4th Edition, Type 1 Component Assembly SPD, File E210793
- ANSI/IEEE C62.41.1, C62.41.2, C62.45
- RoHS Compliant

Mersen
Expertise, our source of energy

GENERAL PRODUCT SPECIFICATIONS

Mounting:	35mm DIN-Rail	Operating & Storage Temperature:	-40°C to + 85°C
Wire Range:	6-14AWG Solid / Stranded CU	Visual End of Life Indicator:	Visual Tab
Terminal Torque:	14.75 lbs-in	Remote End of Life Indicator:	NO/NC Dry Contact
Degree of Protection:	IP 20	Frequency:	50-60 Hz
Flammability:	UL94 V0	Response Time:	<25 ns

1-POLE, SINGLE-PHASE, 2-WIRE

CATALOG NUMBER	NOMINAL VOLTAGE (VAC)	MAXIMUM CONTINUOUS OPERATING VOLTAGE (MCOV, VAC)				VOLTAGE PROTECTION RATING (VPR, VAC)				I_n (kA)
		L-N	L-G	N-G	L-L	L-N	L-G	N-G	L-L	
ST1201PG(M)	120	180	180	-	-	500	500	-	-	20
ST2301PG(M)	240	270	270	-	-	800	800	-	-	20
ST2771PG(M)	277	320	320	-	-	900	900	-	-	20

2-POLE, SPLIT-PHASE, 3-WIRE

CATALOG NUMBER	NOMINAL VOLTAGE (VAC)	MAXIMUM CONTINUOUS OPERATING VOLTAGE (MCOV, VAC)				VOLTAGE PROTECTION RATING (VPR, VAC)				I_n (kA)
		L-N	L-G	N-G	L-L	L-N	L-G	N-G	L-L	
ST208SPG(M)	120/208	180	180	-	360	500	500	-	900	20
ST240SPG(M)	120/240	180	180	-	360	500	500	-	900	20
ST480SPG(M)	240/480	270	270	-	540	800	800	-	1500	20

3-POLE, 3-PHASE DELTA, 3-WIRE

CATALOG NUMBER	NOMINAL VOLTAGE (VAC)	MAXIMUM CONTINUOUS OPERATING VOLTAGE (MCOV, VAC)				VOLTAGE PROTECTION RATING (VPR, VAC)				I_n (kA)
		L-N	L-G	N-G	L-L	L-N	L-G	N-G	L-L	
ST2403PD(M)	240	-	-	-	270	-	-	-	1000	20
ST4803PD(M)	480	-	-	-	550	-	-	-	3000	20

3-POLE, 3-PHASE DELTA, 4-WIRE

CATALOG NUMBER	NOMINAL VOLTAGE (VAC)	MAXIMUM CONTINUOUS OPERATING VOLTAGE (MCOV, VAC)				VOLTAGE PROTECTION RATING (VPR, VAC)				I_n (kA)
		L-N	L-G	N-G	L-L	L-N	L-G	N-G	L-L	
ST2403PDG(M)	240	270	270	-	540	800	800	-	1500	20
ST4803PDG(M)	480	550	550	-	1100	1500	1500	-	3000	20

3-POLE, 3-PHASE WYE, 4-WIRE

CATALOG NUMBER	NOMINAL VOLTAGE (VAC)	MAXIMUM CONTINUOUS OPERATING VOLTAGE (MCOV, VAC)				VOLTAGE PROTECTION RATING (VPR, VAC)				I_n (kA)
		L-N	L-G	N-G	L-L	L-N	L-G	N-G	L-L	
ST2083PYG(M)	120/208	180	180	-	360	500	500	-	900	20
ST4803PYG(M)	277/480	320	320	-	640	900	900	-	1800	20
ST6003PYG(M)	347/600	420	420	-	840	1200	1200	-	2000	20
ST6903PYG(M)	400/690	510	510	-	1020	1500	1500	-	3000	20

4-POLE, 3-PHASE WYE, 5-WIRE, INCLUDING N-G MODE

CATALOG NUMBER	NOMINAL VOLTAGE (VAC)	MAXIMUM CONTINUOUS OPERATING VOLTAGE (MCOV, VAC)				VOLTAGE PROTECTION RATING (VPR, VAC)				I_n (kA)
		L-N	L-G	N-G	L-L	L-N	L-G	N-G	L-L	
ST2083PY(M)	120/208	180	360	180	360	500	900	500	900	20
ST4803PY(M)	277/480	320	470	150	640	1000	1500	500	1800	20
ST6003PY(M)	347/600	420	690	270	840	1500	2500	800	2500	20
ST6903PY(M)	400/690	1020	510	510	1020	3000	1500	1500	3000	20

FOR REMOTE INDICTATION, ADD "M" TO THE END OF THE PART NUMBER. EXAMPLE, ST4803PYM.
OMIT "M" TO ORDER WITHOUT REMOTE INDICATION. EXAMPLE, ST4803PY.

DIMENSIONS - STP SERIES

POLES	A	
	IN	MM
1 Pole	0.71	18.03
2 Pole	1.42	36.06
3 Pole	2.13	54.1
4 Pole	2.84	72.13

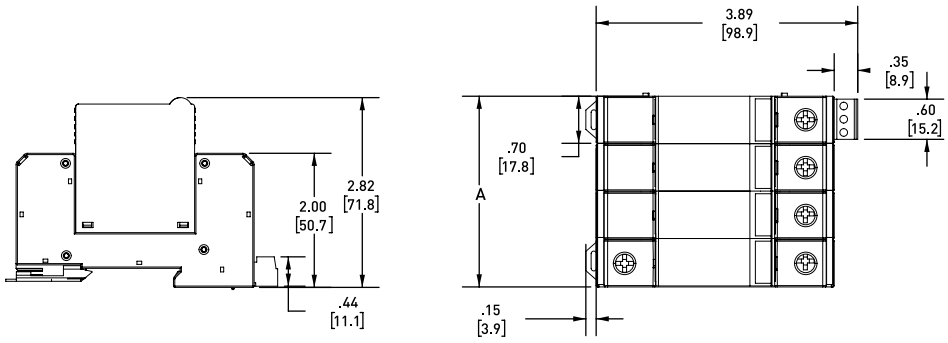

DIMENSIONS - ST SERIES

POLES	A	
	IN	MM
1 Pole	0.7	17.8
2 Pole	1.39	35.5
3 Pole	2.1	53.3
4 Pole	2.8	71

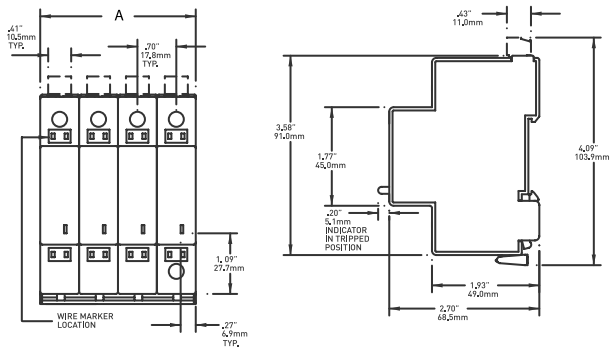

WIRING DIAGRAMS

1-POLE, SINGLE-PHASE, 2-WIRE

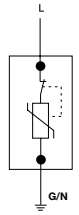

2-POLE, SPLIT-PHASE, 3-WIRE

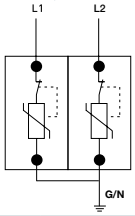

3-POLE, 3-PHASE DELTA, 3-WIRE

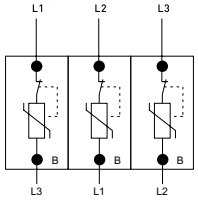

3-POLE, 3-PHASE DELTA, 3-PHASE WYE, 4-WIRE

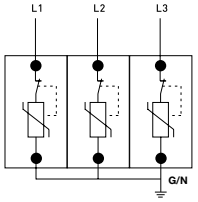

4-POLE, 3-PHASE WYE, 5-WIRE

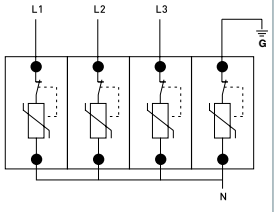

4-POLE, 3-PHASE DELTA HIGH-LEG, 5-WIRE

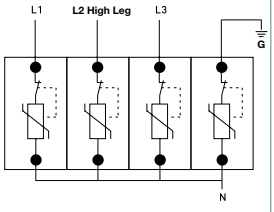

SINGLE PHASE
2 WIRE + GROUND

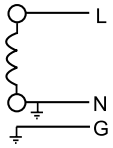

SPLIT PHASE
3 WIRE + GROUND

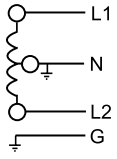

3 PHASE DELTA
3 WIRE + GROUND

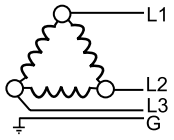

3 PHASE WYE
4 WIRE + GROUND

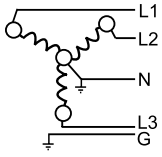

REMOTE STATUS INDICATOR

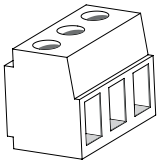

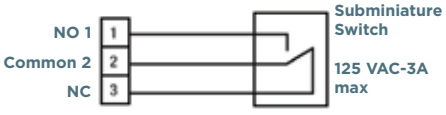

Signal Wire Range	#16 to #30 AWG
Terminal Torque	2.2 lb-in
Cont. between Comm + NO	Product Offline, Not Protected
Cont. between Comm + NC	Product Online, Protected

ST AND STP SERIES: FOR REMOTE INDICATION, ADD "M" TO THE END OF THE CATALOG NUMBER. FOR EXAMPLE, ST4803PYGM.



SURGE PROTECTIVE DEVICE

DIN-RAIL PLUGGABLE SPD FOR PHOTOVOLTAIC APPLICATIONS

STPT2 40 PV is the series of devices that provide advanced overvoltage protection to photovoltaic systems by utilizing Mersen's optimized dynamic thermal disconnection system, which does not require additional overcurrent protection (back-up fuse) due to its high short-circuit withstand rating.

These surge protective devices are suitable for all PV applications: large-scale, rooftop, and self-consumption (off-grid) DC installations.

REFERENCE NUMBER	CATALOG NUMBER	U_{CPV} [VDC]	$U_p@I_n$ (8/20) [kV]	I_n (8/20) [kA]	SCCR [kA]	CARTRIDGE ID (L)
83020138	**STPT2-40K600V-YPV**	660	≤2.6	20	100	C40
83020139	**STPT2-40K600V-YPVM**	660	≤2.6	20	100	C40
83020140	**STPT2-40K1000V-YPV**	1060	≤4	20	50	C41
83020141	**STPT2-40K1000V-YPVM**	1060	≤4	20	50	C41
83020158	**STPT2-40K1500V-YPV**	1500	≤5	10	65	C42
83020159	**STPT2-40K1500V-YPVM**	1500	≤5	10	65	C42

DIMENSIONS

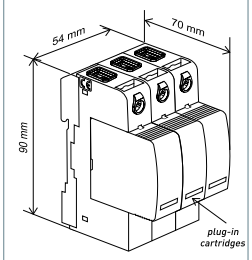

ELECTRICAL DIAGRAM

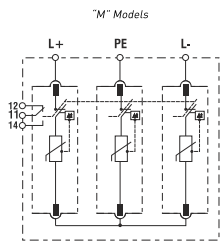

MICROSWITCH DIAGRAM

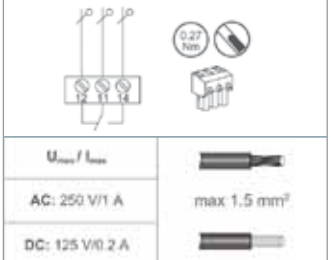

REPLACEMENT CARTRIDGES		NETWORK	U_{CPV} [VDC]	I_{max} (8/20) [kA]	I_n (8/20) @U_p [kA]	$U_p@I_n$ (8/20) [kV]	CARTRIDGE ID.
REF. NUMBER	CATALOG NUMBER						
83020005	**SP2-40K600V-PV**	PV	330	40	20	≤1.3	C40
83020006	**SP2-40K1000V-PV**	PV	530	40	20	≤2	C41
83020010	**SP2-40K1500V-PV**	PV	750	40	10	≤2,5	C42

RATINGS:

- **Volts (U_{cpv}):** 600-1500VDC
- **Nominal Discharge Current Rating (I_n):** 10-20kA
- **Surge Capacity (per phase and per mode):** 40kA
- **Short-Circuit Current Rating (SCCR):** 50-100kA

APPROVALS:

- ANSI/UL 1449 4th Edition, Type 2 Component Assembly, File E468946
- EN 50539-11
- UTE C 61740-51



SURGE PROTECTIVE DEVICE

DIN-RAIL MODULAR SPD FOR IEC TYPE 2 + 3 APPLICATIONS

STMT23 20 S is the series of combined Type 2+3/Class II+III devices for discharging voltage surges while providing a very fine voltage protection level, in accordance with IEC/EN 61643-11.

Suitable as the final stage of protection in panels with Type 2 protection devices installed upstream. These SPDs should be installed as close as possible to the equipment being protected. Ideal for limited spaces. Wide range of voltage ratings.

REF. NUMBER	CATALOG NUMBER WITHOUT/WITH REMOTE MONIT.	U_n [VAC]	U_c [V]	U_p@I_n (8/20) [kV]	I_{max} (8/20) [kA]	I (8/20) [kA]
83230500 83230501	**STMT23-6K20V-SP-S** **STMT23-6K20V-SP-SM**	12	20	≤0.22 (L1-L2) 0.7 (L1/L2-PE)	6	3
83230504 83230505	**STMT23-6K30V-SP-S** **STMT23-6K30V-SP-SM**	24	30	≤0.22 (L1-L2) 0.7 (L1/L2-PE)	6	3
83230506 83230507	**STMT23-6K60V-SP-S** **STMT23-6K60V-SP-SM**	48	60	≤0.33 (L1-L2) 0.7 (L1/L2-PE)	6	3
83230508 83230509	**STMT23-6K75V-SP-S** **STMT23-6K75V-SP-SM**	60	75	≤0.5 (L1-L2) 0.9 (L1/L2-PE)	6	3
83230502 83230503	**STMT23-6K150V-SP-S** **STMT23-6K150V-SP-SM**	120	150	≤0.7 (L1-L2) 0.9 (L1/L2-PE)	6	3
83230510 83230511	**STMT23-20K275V-SP-S** **STMT23-20K275V-SP-SM**	230	275	≤1.4 (L1-L2) 1.4 (L1/L2-PE)	20	10

DIMENSIONS

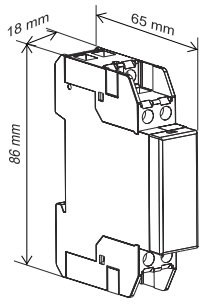

ELECTRICAL DIAGRAM

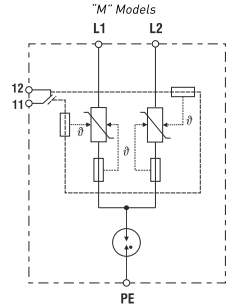

MICROSWITCH DIAGRAM



	U_{max} / I_{max}
AC:	250 V/1 A
DC:	125 V/0.2 A

RATINGS:

- **Volts (U_n):** 12-230VAC
- **Nominal Discharge Current Rating (I_n):** 3-10kA
- **Surge Capacity (per phase and per mode):** 6-20kA
- **Short-Circuit Current Rating (SCCR):** 10kA

APPROVALS:

- IEC/EN 61643-11

CE RoHS

Mersen
Expertise, our source of energy

SURGE-TRAP® STET23 SERIES WITH EMI FILTER (IEC ONLY)



STET23 20 is the series of combined Type 2+3/Class II+III devices for discharging voltage surges while providing a very fine voltage protection level, in accordance with IEC/EN 61643-11. Complete with a built-in powerful EMI filter.

Suitable as the final stage of protection in installations with electromagnetic disturbances which might interrupt, degrade, or limit system performance.

Series connection for applications up to 20A rated current.

REFERENCE NUMBER	CATALOG NUMBER	U_p [VAC]	U_c [V]	U_p@I_n [kV]	I_n (8/20) [kA]	I_L [A]	REMOTE (M)
83230401	**STET23-20K150V-SPM**	120	150	≤0.8	10	20	√
83230403	**STET23-20K275V-SPM**	230	275	≤1.2	10	20	√

DIMENSIONS

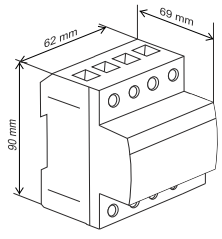

ELECTRICAL DIAGRAM

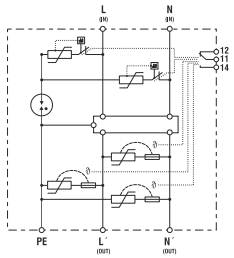

MICROSWITCH DIAGRAM

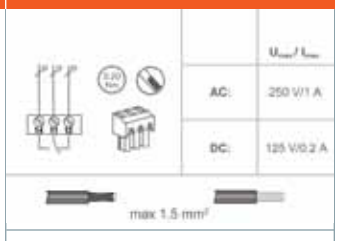

SURGE PROTECTIVE DEVICE

DIN-RAIL MODULAR SPD FOR IEC TYPE 2 + 3 APPLICATIONS

RATINGS:

- **Volts (U_n):** 120-230VAC
- **Nominal Discharge Current Rating (I_n):** 10kA
- **Surge Capacity (per phase and per mode):** 20kA
- **Load Current Rating (I_L):** 20A
- **EMI Filter:** Up to 82dB

APPROVALS:

- IEC/EN 61643-11

CE

SURGE-TRAP® STLB SERIES



SURGE PROTECTIVE DEVICE

IN-LINE SPD FOR LED LIGHTING APPLICATIONS

Mersen's SPD for LED lighting applications, the STLB series is a universal solution with enhanced safety delivering peace-of-mind to users and installers. A single device is suitable for single, split, or three-phase applications; can be installed in series or parallel with the luminaire; features leakage current free technology and visual end-of-life indication. It is also UL Recognized (cURus) and IEC certified.

FEATURES AND BENEFITS:

- Universal, certified SPDs which can be safely used in any luminaire and any installation
- Common applications: Roadway Lighting, Parking Lot/Garage Lighting, indoor/outdoor LED signage, industrial manufacturing facilities, all critical 24/7 applications
- Parallel or series connected device
- End-of-life indication via LED or series disconnection
- Leakage Current Free
- Global Compliance to ANSI/UL/CSA and IEC
- Versatile mounting design accomodates for vertical or horizontal mounting
- 2-year warranty

RATINGS:

- **Volts (U_n):** 100-277VAC
- **Nominal Discharge Current Rating (I_n):** 3kA
- **Surge Capacity (per phase and per mode):** 10kA
- **Short-Circuit Current Rating (SCCR):** 10kA
- **Load Current Rating (I_L):** 2.5A
- **IEEE C62.41.2 Location Category:** C-High 10kV/10kA

APPROVALS:

- ANSI/UL1449 4th Edition, Type 4 SPD, File E468946
- EN 61643-11 Type 2+3 SPD
- RoHS Compliant

Mersen
Expertise, our source of energy

GENERAL PRODUCT SPECIFICATIONS

Mounting:	5.5mm Diameter Mounting Hole	Operating & Storage Temperature:	-40°C to +85°C
Wiring:	Screw Terminals (0.7 Nm)	Relative Humidity Range:	5 to 95%
Wire Range:	14-18 AWG Solid/Stranded Cu	Visual End-of-Life Indicator:	GREEN = OK, OUT = REPLACE
Connection:	Series or Parallel	Frequency:	50-60Hz
Enclosure:	IP20	Maximum Back-up Fuse:	Mersen AJT25
Flammability:	UL94-V0	Response Time (L-L, L-G):	25ns, 100ns

REFERENCE NUMBER	CATALOG NUMBER	SYSTEM VOLTAGE AND CONFIGURATION	I_n	MAXIMUM CONTINUOUS OPERATING VOLTAGE (MCOV, U_c)		MEASURED LIMITING VOLTAGES (MLV)	
				L-G	L-L	L-G	L-L
83230320	STLBT23-10K320V-C3U-DD	120V Single Phase 240V Single Phase 240/120V Split Phase 208Y/120V 3-Ph WYE 480Y/277V 3-Ph WYE 240V 3-Ph DELTA	3kA	320	320	1020	1340

Dimensions

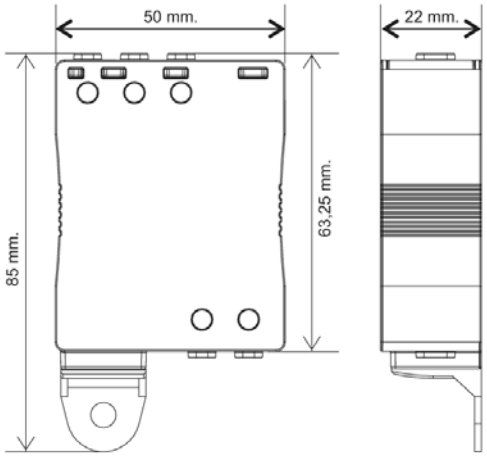

Wiring Diagram: Series

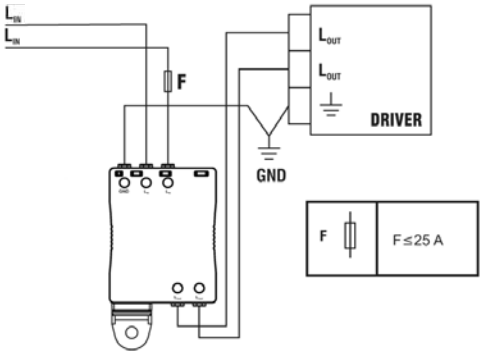

Electrical Diagram

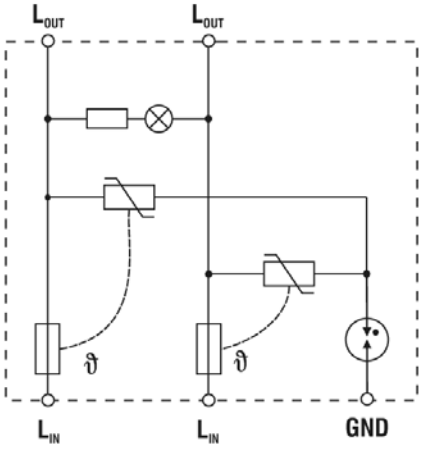

Wiring Diagram: Parallel

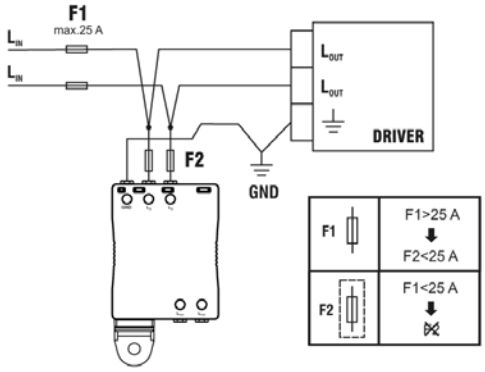

THERMALLY PROTECTED MOV TPMOV® TECHNOLOGY



Mersen's patented TPMOV® technology eliminates common failure modes that occur in the field with standard metal oxide varistors. Internally the TPMOV is comprised of a voltage clamping device and a disconnecting apparatus that monitors the status of the metal oxide disk, making the TPMOV a fail-safe device. In the event of an overvoltage breakdown, the metal oxide disk is securely disconnected from the system power by an arc shield. Upon failure, the TPMOV is also equipped with a visual pin indicator as well as a normally open micro-switch, providing remote indication if applicable.

FEATURES AND BENEFITS:

- High energy capacity
- Consistent footprint with 25–40mm MOVs
- Built-in visual/remote indication
- Wave solderable
- No additional overcurrent protection device (fuses) required

SURGE PROTECTIVE DEVICE

COMPONENT SPD FOR OEM DESIGN AND BUILD

RATINGS:

- **Volts (U_n):** 150-550VAC
- **Nominal Discharge Current Rating (I_n):** 20kA
- **Surge Capacity:** 50kA
- **Short-Circuit Current Rating (SCCR):** 200kA

APPROVALS:

- ANSI/UL 1449 4th Edition, Type 1 Component Assembly SPD, File E210793
- RoHS Compliant

Mersen
Expertise, our source of energy

CATALOG NUMBER (INCLUDES SUFFIXES*)	MAXIMUM CONTINUOUS OPERATING VOLTAGE (MCOV, VAC)	VOLTAGE PROTECTION RATING (VPR)	NOMINAL DISCHARGE CURRENT (kA)	OPERATING TEMPERATURE	DIMENSION A (INCHES)
150TPMOV	150	700	20	-40°C to +85°C	0.485
180TPMOV	180	800	20	-40°C to +85°C	0.485
270TPMOV	275	800	20	-40°C to +85°C	0.495
320TPMOV	320	1000	20	-40°C to +85°C	0.51
420TPMOV	420	1500	20	-40°C to +85°C	0.54
510TPMOV	510	1500	20	-40°C to +85°C	0.54
550TPMOV	550	1500	20	-40°C to +85°C	0.545

CATALOG - ORDERING SYSTEM

150
Maximum Continuous Operating Voltage (MCOV)

150: 150VAC
180: 180VAC
270: 275VAC
320: 320VAC
420: 420VAC
510: 510VAC
550: 550VAC

TPMOV
Model Series

TPMOV: Thermally Protected MOV

SL
Mechanical Options

Suffix	PCB Leads	Tact Switch	Visual Tabs	Pkg Qty
Blank	No	Yes	Yes	10
S	Yes	Yes	No	10
SL	Yes	Yes	No	500
ST	Yes	Yes	Yes	10
SLT	Yes	Yes	Yes	500
HV	No	Yes-HV	Yes	10
S-HV	Yes	Yes-HV	Yes	10
SL-HV	Yes	Yes-HV	Yes	500

* For details regarding HV microswitch please consult factory

Dimensional Drawing of TPMOV

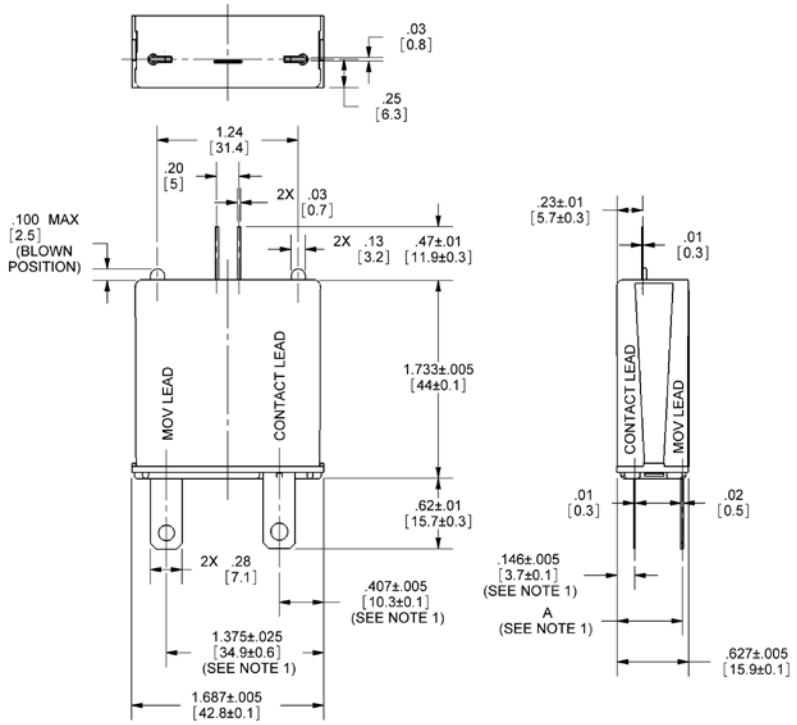

Board Layout Dimensions

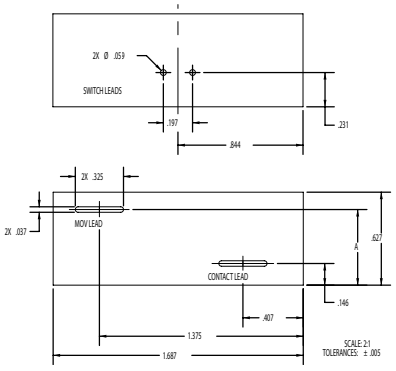

VOLTAGE	A DIMENSION
550	0.545
420/510	0.54
320	0.51
270	0.495
150/180	0.485

MOV PROTECTOR FUSE VSP SERIES



Mersen surge suppression fuses are specially designed to address the protection of SPD systems. Our surge suppression fuses have been specially designed to withstand 8/20 µSec surge pulses without opening, allowing the SPD system to react to the surge. All surge suppression fuses have a 8/20 µSec surge rating, not a continuous current rating. Under AC short circuit conditions these surge suppression fuses are very current limiting.

FEATURES AND BENEFITS:

- VSP fuses rated 600VAC, 200kA I.R.
- Surge ratings of 5-100kA 8/20 µSec capacity
- Various mounting configurations ferrules, blade, bolt-in, pc board mount

SURGE PROTECTIVE DEVICE

COMPONENT DEVICE FOR OEM DESIGN AND BUILD

RATINGS:

- **Volts:** 600VAC
- **Surge Rating:** 5-100kA 8/20 µSec
- **Interrupting Rating (IR):** 200kA

APPROVALS:

- ANSI/UL 248 Special Purpose MOV Fuse, File E60314

c UL us

Mersen
Expertise, our source of energy

MOV PROTECTOR FUSE VSP SERIES

PRODUCT PERFORMANCE DATA

CATALOG NO. (CONNECTION SUFFIX)	VOLTAGE RATING (AC)	8X20 µSEC SURGE RATING	MELTING I^2T (A2S)	CLEARING I^2T (A2S)	I_{PEAK} @ 100KA 60 HZ (A)
VSP5-2,-R,-H,-S	600V	5,000	341	936	3,652
VSP10-2,-R,-H,-S	600V	10,000	1,541	3,744	5,794
VSP15-2,-R,-H,-S	600V	15,000	3,072	8,424	7,591
VSP20-2,-R,-H,-S	600V	20,000	4,992	14,400	9,194
VSP30, -2	600V	30,000	12,507	33,696	12,044
VSP40, -2	600V	40,000	19,543	59,904	14,588
VSP50, -2	600V	50,000	32,020	93,600	16,925
VSP60, -2	600V	60,000	42,808	134,784	19,110
VSP70, -2	600V	70,000	61,152	183,456	21,176
VSP80, -2	600V	80,000	79,872	239,616	23,146
VSP90, -2	600V	90,000	99,000	303,264	25,034
VSP100, -2	480V	100,000	121,500	374,400	26,854
VSP100-XL	600V	100,000	121,500	374,400	26,854

VSP (5-20)-2,R,H,S

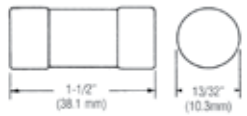

VSP (30-100)-2

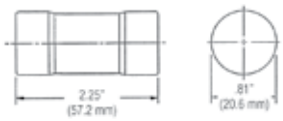

RECOMMENDED FUSE BLOCKS FOR VSP FUSES

VSP(5-20)-2

NUMBER OF POLES	SCREW WITH DOUBLE QUICK CONNECTS	PRESSURE PLATE WITH DOUBLE QUICK CONNECTS	COPPER BOX CONNECTOR
ADDER	30310	30320	30350
1	30311	30321	30351
2	30312	30322	30352
3	30313	30323	30353

VSP(30-100)-2

NUMBER OF POLES	CATALOG NUMBER		
ADDER	60305J	60315J	60325J
1	60306J	60316J	60326J
2	60307J	60317J	60327J
3	60308J	60318J	60328J

VSP30-100

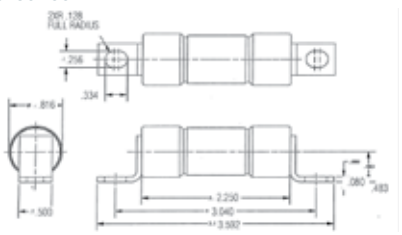

VSP100-XL

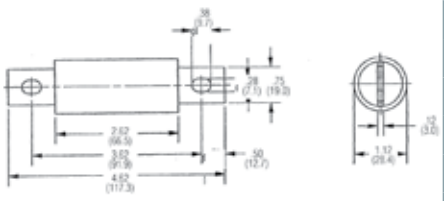

MOUNTING OPTIONS

DOUBLE HOLE MOUNT (ROUND HOLES)

-H

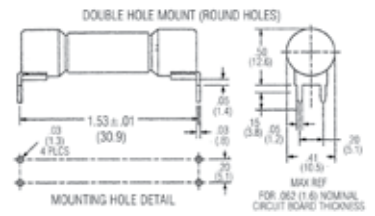

PC BOARD MOUNTING

-R

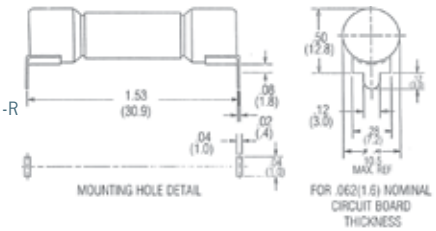

SURFACE SCREW MOUNT

-S

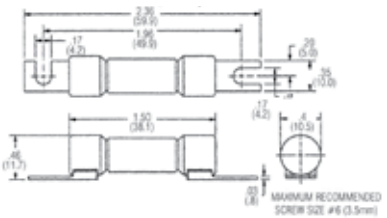



Mersen
Expertise, our source of energy

MERSEN IS A GLOBAL EXPERT IN ELECTRICAL POWER AND ADVANCED MATERIALS

NORTH AMERICA

USA
Mersen USA
374 Merrimac Street
Newburyport, MA 01950
T : 978 462 6662

CANADA
Mersen Canada
6200 Kestrel Road
Mississauga, ON L5T 1Z1
T : 416 252 9371

EUROPE

FRANCE
Mersen France SB S.A.S.
15 rue Jacques de Vaucanson
F-69720 Saint-Bonnet-de-Mure
T : +33 4 72 22 66 11

ASIA

CHINA
Mersen Shanghai
No.55-A6. Shu Shan Road
Songjiang 201611 Shanghai
T : +8621 67602388

EP.MERSEN.COM

BR-SURGE-TRAP-UL-001 | 10.16 | Printex | 4000 | ©Mersen