BRISK17FA30



Color: Bronze

Weight: 2.3 lbs

Project:	**Type:**
Prepared By:	**Date:**

Driver Info

Type	Constant Current
120V	0.26A
208V	0.15A
240V	0.13A
277V	0.12A
Input Watts	29.2/29.6/30.6W

LED Info

Watts	30W
Color Temp	3000/4000/5000K
Color Accuracy	81-83 CRI
L70 Lifespan	100,000 Hours
Lumens	3947/4362/4207 lm
Efficacy	135.3/147.2/137.6 lm/W

Technical Specifications

Field Adjustability

Field Adjustable:
Color temperature selectable by 3000K, 4000K and 5000K

Compliance

UL Listed:
Suitable for wet locations

IESNA LM-79 & LM-80 Testing:
RAB LED luminaires and LED components have been tested by an independent laboratory in accordance with IESNA LM-79 and LM-80.

IP Rating:
Ingress protection rating of IP65 for dust and water

DLC Listed:
This product family is listed with the DesignLights Consortium (DLC). Individual SKUs within this family may carry either a DLC Standard or DLC Premium qualification. Please refer to the individual product specification sheet or the DLC Qualified Products List (QPL) at designlights.org to confirm the qualification status of a specific SKU prior to specification or purchase.

Performance

Lifespan:
100,000-Hour LED lifespan based on IESlm-80 results and TM-21 calculations

Wattage Equivalency:
Equivalent to 100W Metal Halide

LED Characteristics

LEDs:
Long-life, high-efficiency, surface-mount LEDs

Color Uniformity:
RAB's range of Correlated Color Temperature follows the guidelines of the American National Standard for Specifications for the Chromaticity of Solid State Lighting (SSL) Products, ANSI C78.377-2017.

Electrical

Driver:
Constant Current, Class 2, 120-277V, 50/60 Hz, 120V: 0.26A, 208V: 0.15A, 240V: 0.13A, 277V: 0.12A

Dimming Driver:
Driver includes dimming control wiring for 0-10V dimming systems. Requires separate 0-10V DC dimming circuit. Dims down to 10%.

Photocell:
120-277V Discreet, integrated button photocell included. Photocell is compatible with 120V-277V.

Construction

Cold Weather Starting:
The minimum starting temperature is -40°F (-40°C)

Maximum Ambient Temperature:
Suitable for use in up to 113°F (45°C)

Housing:
Precision die-cast aluminum

Finish:
Formulated for high durability and long-lasting color

Green Technology:
Mercury and UV free. RoHS-compliant components.

Installation

Mounting:
Heavy duty, die-cast junction box with four (4) conduit entries (one top, two side, one back)

Other

5-Year Limited Warranty:
The RAB 5-year, limited warranty covers light output, driver performance and paint finish. RAB's warranty is subject to all terms and conditions found at rablighting.com/warranty.

Copyright © 2026 RAB Lighting All Rights Reserved Note: Specifications are subject to change at any time without notice

BRISK17FA30

Dimensions

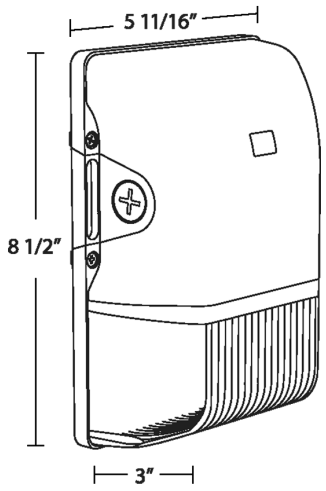

Features

- DLC Premium listed
- IP65 Rated
- 100,000-Hour LED lifespan
- 5-Year, limited warranty

Ordering Matrix

Family	Wattage	Color Temp	Finish	Driver	Options
BRISK17FA	30				
	20 = 20W **30 =** 30W	**Blank =** 3000/4000/5000K CCT Adjustable	**Blank =** Bronze **W =** White	**Blank =** 120-277V, 0-10V Dimming	**Blank =** Integrated Button Photocell

Copyright © 2026 RAB Lighting All Rights Reserved Note: Specifications are subject to change at any time without notice