C103A



Project:

Type:

Prepared By:

Date:

Die cast round covers with one or three 1/2" holes. Fit 4" round boxes. Supplied with thick foam rubber gasket and two #10-24 stainless steel screws. 3 hole cover comes with one die cast 1/2" close-up plug.

Color: Bronze

Weight: 0.2 lbs

Technical Specifications

Compliance

UL Listed:
Suitable for wet locations

Construction

Covers:
Precision die cast aluminum round covers

Screws:
10-24 Brass Round Head Phillips/slotted

Gaskets:
1/8" thick closed cell silicone rubber for long lasting seal won't crumple or break

Hole Count:
3 Hole

Other

Replacement Plugs:
Available for round and rectangular covers and boxes

Copyright © 2026 RAB Lighting All Rights Reserved Note: Specifications are subject to change at any time without notice

C103A

Dimensions

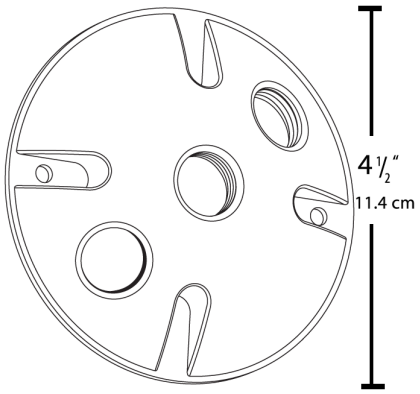

Features

- 1/8" thick weather seal gasket is closed cell silicone rubber for long lasting seal that won't break
- Stainless steel screws provided
- Die cast aluminum covers are color matched
- Close-up plugs allow Phillips or slotted screwdrivers for easy installation

Copyright © 2026 RAB Lighting All Rights Reserved Note: Specifications are subject to change at any time without notice