VAN1LED6W

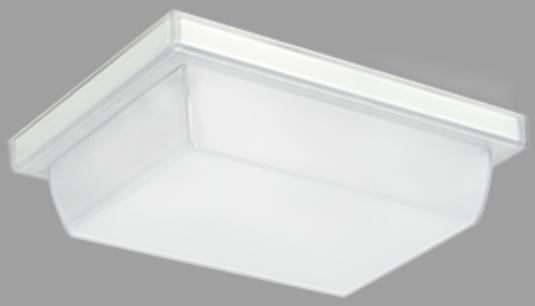

Low-profile vandalproof fixture replaces traditional incandescent luminaires delivering impressive energy savings.

Color: White

Weight: 1.6 lbs

Project:	**Type:**
Prepared By:	**Date:**

Driver Info

Type	Constant Current
120V	0.055A
208V	N/A
240V	N/A
277V	N/A
Input Watts	7W

LED Info

Watts	6W
Color Temp	5000K (Cool)
Color Accuracy	85 CRI
L70 Lifespan	50,000 Hours
Lumens	872 lm
Efficacy	124.6 lm/W

Technical Specifications

Compliance

UL Listed:
Suitable for Wet Locations. Covered Ceiling Mount Only.

IESNA LM-79 & LM-80 Testing:
RAB LED luminaires and LED components have been tested by an independent laboratory in accordance with IESNA LM-79 and LM-80.

DLC Listed:
This product family is listed with the DesignLights Consortium (DLC). Individual SKUs within this family may carry either a DLC Standard or DLC Premium qualification. Please refer to the individual product specification sheet or the DLC Qualified Products List (QPL) at designlights.org to confirm the qualification status of a specific SKU prior to specification or purchase.

Other

Dimmer Compatibility:
TRIAC/ELV dimming capable. See dimmer compatibility guide here.

Optional Sensor:
VAN1LED is compatible with occupancy sensors. Click here to see all occupancy sensor accessories.

5-Year, No-Compromise Warranty:
RAB warrants that our LED products will be free from defects in materials and workmanship for a period of five (5) years from the date of delivery to the end user, including coverage of light output, color stability, driver performance and fixture finish. RAB's warranty is subject to all terms and conditions found at rablighting.com/warranty.

Construction

Cold Weather Starting:
The minimum starting temperature is -22°F (-30°C)

Maximum Ambient Temperature:
Suitable for use in up to 113°F (45°C)

Housing:
Precision steel housing

Lens:
Vandalproof, frosted polycarbonate drop lens

Gaskets:
High-temperature silicone gaskets

Finish:
Our environmentally friendly polyester powder coatings are formulated for high-durability and long-lasting color

Green Technology:
Mercury and UV free. RoHS-compliant components.

Performance

Lifespan:
50,000-Hour LED lifespan based on IESlm-80 results and TM-21 calculations

Wattage Equivalency:
Equivalent to 35W Metal Halide

LED Characteristics

LEDs:
120V long-lfe LEDs

Color Stability:
RAB LEDs exceed industry standards for chromatic stability

Color Uniformity:
RAB's range of Correlated Color Temperature follows the guidelines of the American National Standard for Specifications for the Chromaticity of Solid State Lighting (SSL) Products, ANSI C78.377-2017.

Installation

Mounting:
Ceiling mount to recessed junction with knockout template. Tamperproof screws.

Copyright © 2026 RAB Lighting All Rights Reserved Note: Specifications are subject to change at any time without notice

Technical Specifications (continued)

Electrical

Driver:
AC board, 50/60 Hz., 120V: 55mA

THD:
11.4% at 120V

Power Factor:
99.4% at 120V

Surge Protection:
2.5 kV

Dimensions

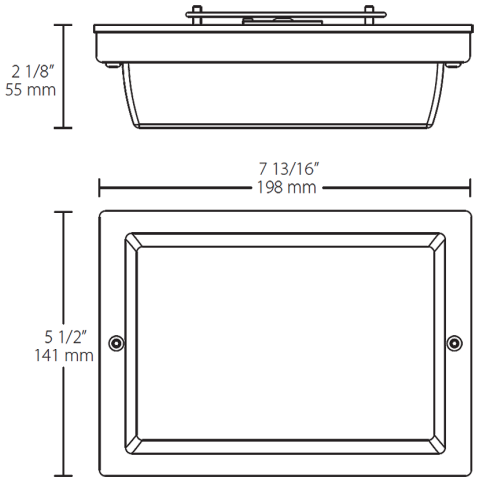

Features

- Vandalproof polycarbonate drop lens
- Ultra efficiency
- Low-profile design

Ordering Matrix

Family	Wattage	Color Temp	Finish
VAN1LED	6		W
	6 = 6W **12 =** 12W	**Blank =** 5000K Cool **N =** 4000K Neutral **Y =** 3000K Warm	**W =** White

Copyright © 2026 RAB Lighting All Rights Reserved Note: Specifications are subject to change at any time without notice