LS300W



Luminator sensor with 110° view, manual override, 300 Watt switching capacity and auto test logic.

Color: White

Weight: 0.6 lbs

Project:	Type:
Prepared By:	Date:

Technical Specifications

Compliance

UL Listed:
Suitable for wet locations

Electrical

Voltage:
120V AC 60Hz

Power Consumption:
1W

Wall Switch Manual Override:
Two flip logic prevents activation by momentary power outages. Override resets to auto after 6 hours or at dawn. No extra wiring needed.

Surge Protection:
Withstands up to 3000 volts

Switching Capacity:
300W incandescent @ 120 volts, 2.5 amps.

Sensor Settings

Time Adjustment:
8 seconds to 10 minutes

Photo Control:
Deactivates lights during daylight.

Detector Sensitivity:
Adjustable from 100% to 50%

Auto Test Logic:
5 minutes of test time when powered. Resets to auto mode without adjustment.

Sensor Housing:
Made of tough, corrosion resistant polycarbonate

Detection:
110° view

Construction

Floodlights:
Made of tough, corrosion-resistant polycarbonate. Accepts PAR-38 lamps, medium base, 150W max. Lamps not included.

Other

Warranty:
3-year sensor warranty

Copyright © 2026 RAB Lighting All Rights Reserved Note: Specifications are subject to change at any time without notice

Dimensions

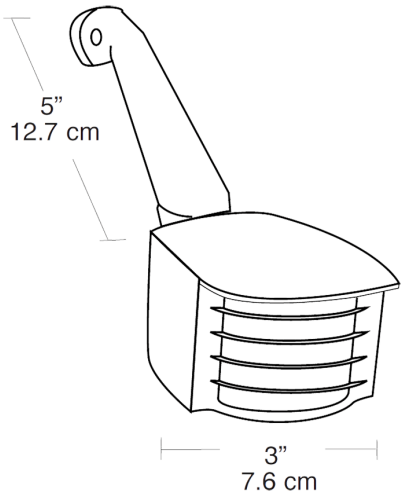

Features

- 300 Watt switching capacity
- Manual override
- Fully adjustable positioning
- 110° double look down lens
- Tough, vandal resistant lens and grill
- LS300 fits 1/2" standard threaded cover plates
- 3-Year Warranty

Copyright © 2026 RAB Lighting All Rights Reserved Note: Specifications are subject to change at any time without notice