FXLEDSSFW



Color: White

Weight: 10.1 lbs

Project:	**Type:**
Prepared By:	**Date:**

Driver Info		LED Info	
Type	Constant Current	Watts	168/132/97/69W
120V	1.39A/1.07A/0.80A/0.60A	Color Temp	3000/4000/5000K
208V	0.80A/0.62A/0.51A/0.42A	Color Accuracy	82-86 CRI
240V	0.69A/0.53A/0.44A/0.36A	L70 Lifespan	100,000 Hours
277V	0.62A/0.49A/0.39A/0.31A	Lumens	11025-23835 lm
Input Watts	70.5-166.1W	Efficacy	131.2-164.4 lm/W

Technical Specifications

Field Adjustability

Field Adjustable:
Field Adjustable Light Output:
168/132/97/69W (factory default 168W)
Color temperature selectable by 3000K, 4000K and 5000K (factory default 4000K)

Compliance

UL Listed:
Suitable for wet locations. Suitable for mounting within 4 ft (1.2m) of the ground.

IP Rating:
Ingress protection rating of IP65 for dust and water

IESNA LM-79 & LM-80 Testing:
RAB LED luminaires and LED components have been tested by an independent laboratory in accordance with IESNA LM-79 and LM-80.

Trade Agreements Act Compliant:
This product is a product of Cambodia and a "designated country" end product that complies with the Trade Agreements Act

DLC Listed:
This product family is listed with the DesignLights Consortium (DLC). Individual SKUs within this family may carry either a DLC Standard or DLC Premium qualification. Please refer to the individual product specification sheet or the DLC Qualified Products List (QPL) at designlights.org to confirm the qualification status of a specific SKU prior to specification or purchase.

LED Characteristics

LEDs:
Long-life, high-efficacy, discrete, surface-mount LEDs

Color Consistency:
7-step MacAdam Ellipse binning to achieve consistent fixture-to-fixture color

Color Stability:
LED color temperature is warrantied to Shift no more than 200K in color temperature over a 5-year period

Color Uniformity:
RAB's range of Correlated Color Temperature follows the guidelines of the American National Standard for (SSL) Products, ANSI C78.377-2017.

Electrical

Driver:
69W: Constant Current, Class 2, 120-277V, 50/60 Hz, 120V: 0.58A, 208V: 0.34A, 240V: 0.29A, 277V: 0.25

97W: Constant Current, Class 2, 120-277V, 50/60 Hz, 120V: 0.81A, 208V: 0.47A, 240V: 0.41A, 277V: 0.35A

132W: Constant Current, Class 2, 120-277V, 50/60 Hz, 120V: 1.10A, 208V: 0.64A, 240V: 0.55A, 277V: 0.48A

168W: Constant Current, Class 2, 120-277V, 50/60 Hz, 120V: 1.40A, 208V: 0.81A, 240V: 0.70A, 277V: 0.61A

Dimming Driver:
Driver includes dimming control wiring for 0-10V dimming systems. Requires separate 0-10V DC dimming circuit. Dims down to 10%.

Surge Protection:
L/N: 6 kV, L/N-PE: 6 kV

Performance

Lifespan:
100,000-Hour LED lifespan based on IESlm-80 results and TM-21 calculations

Copyright © 2026 RAB Lighting All Rights Reserved Note: Specifications are subject to change at any time without notice

Technical Specifications (continued)

Wattage Equivalency:
168W: 750W Metal Halide
132W: 400W Metal Halide
97W: 400W Metal Halide
69W: 350W Metal Halide

Optical

NEMA Type:
NEMA Beam Spread 6H x 6V

Construction

Cold Weather Starting:
The minimum starting temperature is -40°F (-40°C)

Ambient Temperature :
Max Power Temp Rating: 104°F (40°C)
Middle Power Temp Rating: 47°C (117°F)
Low Power Temp Rating: 54°C (129°F)

Housing:
Die-cast aluminum

Lens:
Polycarbonate lens on LEDs, glass lens as cover

Reflector:
Polyethylene Terephthalate (PET)

Gaskets:
Ethylene Propylene Diene Monomer (EPDM)

Finish:
Formulated for high durability and long-lasting color

Green Technology:
Mercury and UV free. RoHS-compliant components.

Installation

Mounting:
2 3/8" slipfitter mount with stainless steel hardware

Other

10-Year, No-Compromise Warranty:
RAB warrants that our LED products will be free from defects in materials and workmanship for a period of ten (10) years from the date of delivery to the end user, including coverage of light output, color stability, driver performance and fixture finish. RAB's warranty is subject to all terms and conditions found at rablighting.com/warranty.

Copyright © 2026 RAB Lighting All Rights Reserved Note: Specifications are subject to change at any time without notice

Dimensions

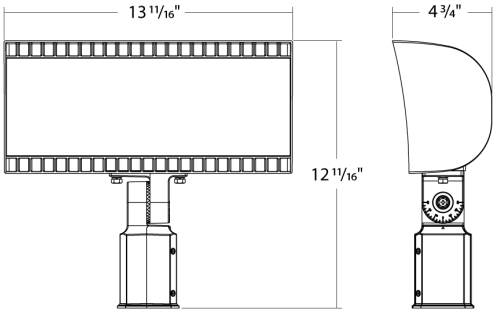

Features

- 100,000-hour life based on LM-80 results and TM-21 calculations
- DLC Premium Listed
- IP66 Rating protects against dust & water ingress
- 10-Year, No-Compromise Warranty

Ordering Matrix

Family	Housing Size	Color Temp	NEMA Type	Mounting	Finish	Driver	Options
FXLED	S			SF	W		
	S = Field Adjustable 168/132/97/69W **M =** Field Adjustable 346/213W **L =** Field Adjustable 534/445W **XS =** Field Adjustable 80/60/40W	**Blank =** 3000/4000/5000K CCT Adjustable **Blank =** 4000/5000K CCT Adjustable	**B55 =** 5H x 5V [1] **B33 =** 3H x 3V [1] **Blank =** 6H x 6V (XS&S) or 7H x 6V (M&L)	**SF =** Slipfitter **T =** Trunnion	**Blank =** Bronze **W =** White	**Blank =** 120-277V, 0-10V Dimming **/480 =** 480V, 0-10V Dimming	**Blank =** No Option **/7PR =** 7-Pin receptacle

[1] *Available on medium (M) and large (L) sizes only*

Copyright © 2026 RAB Lighting All Rights Reserved Note: Specifications are subject to change at any time without notice