CU4B



Die cast sensor & floodlight mounting plate fits round, rectangular, octagonal, recessed & surface mount boxes. Lower hole offers better sensor mounting position. 3 close-up plugs, thick, weatherproof gaskets, universal mounting bar and Hanging Helper Hook provided.

Color: Black

Weight: 0.7 lbs

Project:	**Type:**
Prepared By:	**Date:**

Technical Specifications

Compliance

UL Listed:
Suitable for wet locations

Trade Agreements Act Compliant:
This product is a product of Cambodia and a "designated country" end product that complies with the Trade Agreements Act

Construction

Covers:
Precision die cast aluminum or molded polycarbonate plastic with 1/2" threaded holes

Screws:
10-24 Brass Round Head Phillips/slotted

Gaskets:
1/8" thick closed cell silicone rubber for long lasting seal won't crumple or break

Hole Count:
4 Hole

Other

Replacement Plugs:
Available for round and rectangular covers and boxes

Patents:
Pat. D520,465.

Copyright © 2026 RAB Lighting All Rights Reserved Note: Specifications are subject to change at any time without notice

Dimensions

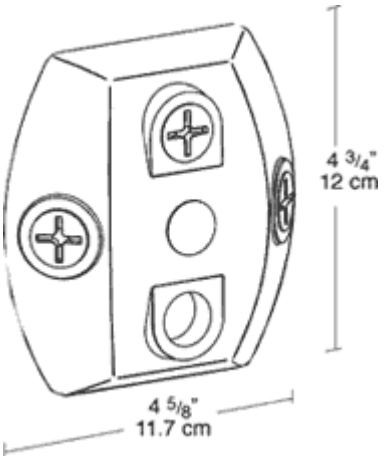

Features

- 1/8" thick weather seal gasket is closed cell foam rubber for long lasting seal that won't break
- Stainless steel screws provided
- Die cast aluminum covers are color matched
- Close-up plugs allow Phillips or slotted screwdrivers for easy installation

Copyright © 2026 RAB Lighting All Rights Reserved Note: Specifications are subject to change at any time without notice