WFR3R8835120WS



UPC: 019813513676

Color: White

Weight: 0.5 lbs

Project:	**Type:**
Prepared By:	**Date:**

Driver Info

Type	Constant Current
120V	0.101A
208V	N/A
240V	N/A
277V	N/A
Input Watts	8W

LED Info

Watts	8W
Color Temp	3500K
Color Accuracy	80 CRI
L70 Lifespan	50,000 Hours
Lumens	571 lm
Efficacy	68.75

Technical Specifications

Compliance

UL Listed:
Suitable for wet locations

Energy Star Approved:
ENERGY STAR® Version 2.2 Certified

Certification Model Number:
DLW0003

NEC Compliant:
Suitable for use in closets. Compliant with NEC Sec. 410.16 (A)(1) and 410.16 (C5).

IC Rated:
Suitable for direct contact with insulation.
Type IC inherently protected, suitable for direct contact to air permeable insulation and cULus listed for damp locations.
Not for use in direct contact with spray foam insulation, consult NEMA LSD57-2013.

Electrical

Dimming Driver:
TRIAC compatible dimmer with dimming as low as 5%. See dimmer compatibility guide here.

Power Factor:
≥0.9

Remote Driver:
Die-cast metal driver / junction box with a hinged cover.
Listed for 12AWG and 14AWG conduit.
Includes two metal knockouts for wiring.
Quick connectors included.
Plenum rated cable connector to connect from module to remote driver box.

PF:
≥0.9

Input Voltage:
120V

Operating Frequency (Hz):
60Hz

Performance

Lifespan:
50,000-Hour LED lifespan based on IESlm-80 results and TM-21 calculations

Wattage Equivalency:
60W Incandescent

Construction

Air Tight:
Housing certified Air Tight as per ASTM-E283

Edgelit Design:
Allows for extremely thin fixture depth for any ceiling application

Trim Style:
Smooth Trim

Housing:
Made from precision die-cast aluminum construction, dissipates heat from electrical components

Cold Weather Starting:
The minimum starting temperature is -22°F (-30°C)

Maximum Ambient Temperature:
Suitable for use in up to 104°F (40°C)

Lens:
Frosted polycarbonate diffusion lens

Green Technology:
Mercury and UV free. RoHS-compliant components.

Finish:
Matte White

LED Characteristics

Beam Angle:
120°

Copyright © 2026 RAB Lighting All Rights Reserved Note: Specifications are subject to change at any time without notice

Technical Specifications (continued)

LEDs:
Long-life, high-efficacy, surface-mount LEDs

Installation

Mounting:
Robust retention clips spring loaded tabs ensure the fixture is securely installed. Can be installed in 1/4" to 1 1/2" thick ceilings.

Other

Template:
Template included for easy ceiling cut out

5-Year, No-Compromise Warranty:
RAB warrants that our LED products will be free from defects in materials and workmanship for a period of five (5) years from the date of delivery to the end user, including coverage of light output, color stability, driver performance and fixture finish. RAB's warranty is subject to all terms and conditions found at rablighting.com/warranty.

Case and Pallet Dimensions

	QTY	LENGTH (in)	WIDTH (in)	HEIGHT (in)
CASE	6	9.29	7.91	7
PALLET	1350	4.29	2.36	58.82

Dimension

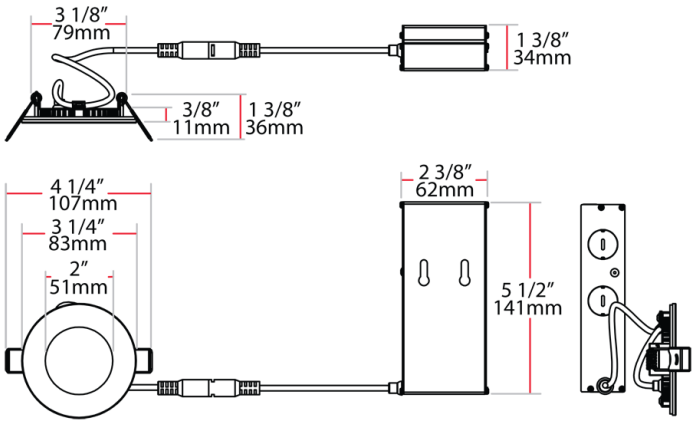

Copyright © 2026 RAB Lighting All Rights Reserved Note: Specifications are subject to change at any time without notice

WFR3R8835120WS

Light Distribution

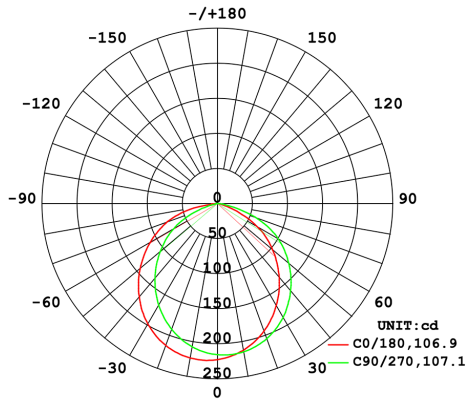

Features

- Super slim Edge-lit fixture for thin fixture depth
- No recessed housing or J-box required
- New construction or retrofit applications
- UL wet location rated
- Smooth diffused uniform light distribution
- Dimmable down to 5% on compatible dimmers
- Spring loaded retention clips
- Robust, die cast aluminum construction
- IC and airtight rated
- 5-Year, No-Compromise Warranty

Ordering Matrix

Family	Size	Shape	Wattage	CRI/Color Temp	Driver	Finish	Trim
WFR	3	R	8	835	120	W	S
	4 = 4" **6** = 6"	**R** = Round	**9** = 9W **13** = 13W	**940** = 90 CRI, 4000K Neutral **930** = 90 CRI, 3000K Warm	**120** = 120V (Phase Dimming)	**W** = White	**S** = Smooth

Copyright © 2026 RAB Lighting All Rights Reserved Note: Specifications are subject to change at any time without notice