SWISHFA2X2/D10/E2

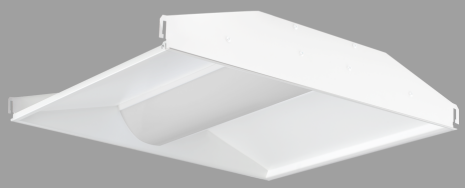

Color: White

Weight: 17.9 lbs

Project:	**Type:**
Prepared By:	**Date:**

Driver Info

Type	Constant Current
120V	0.25A
208V	0.15A
240V	0.13A
277V	0.12A
Input Watts	18.5-38.6W

LED Info

Watts	29W
Color Temp	Field Adjustable
Color Accuracy	83-86 CRI
L70 Lifespan	100,000 Hours
Lumens	2432-4913 lm
Efficacy	116.2-139.1 lm/W

Technical Specifications

Field Adjustability

Field Adjustable:
Field Adjustable Light Output:
2' x 2': 39W/29W/19W (factory default 29W)
Color temperature selectable by 3500K, 4000K and 5000K (factory default 4000K)

Compliance

UL Listed:
Suitable for damp locations

IESNA LM-79 & LM-80 Testing:
RAB LED luminaires and LED components have been tested by an independent laboratory in accordance with IESNA LM-79 and LM-80.

IC Rated:
Suitable for direct contact with insulation

Trade Agreements Act Compliant:
This product is a product of Cambodia and a "designated country" end product that complies with the Trade Agreements Act

DLC Listed:
This product family is listed with the DesignLights Consortium (DLC). Individual SKUs within this family may carry either a DLC Standard or DLC Premium qualification. Please refer to the individual product specification sheet or the DLC Qualified Products List (QPL) at designlights.org to confirm the qualification status of a specific SKU prior to specification or purchase.

Electrical

Driver:
Class 2, Constant Current, 120-277V, 50/60 Hz, 120V: 0.25A, 208V: 0.14A, 240V: 0.12A, 277V: 0.11A

Dimming Driver:
Driver includes dimming control wiring for 0-10V dimming systems. Requires separate 0-10V DC dimming circuit. Dims down to 10%.

THD:
4.65% at 120V, 16.05% at 277V

Power Factor:
99.8% at 120V, 97.4% at 277V

Surge Protection:
2 kV

Battery Backup:
Battery backup will operate the LED Lamp for 90 minutes if power fails. Wired for 120V-277V.

Battery Backup Light Loss Factor:
39W: 0.222
29W: 0.286
19W: 0.444

Construction

Cold Weather Starting:
The minimum starting temperature is -22°F (-30°C)

Ambient Temperature:
Suitable for use in up to 104°F (40°C)

Housing:
Die-formed, 20-gauge, cold-rolled steel

Reflector:
Integral reflector (on the sides) with high reflectance finish, optimized for uniform distribution.

Lens:
Frosted polycarbonate lens

Finish:
Formulated for high durability and long-lasting color

Copyright © 2026 RAB Lighting All Rights Reserved Note: Specifications are subject to change at any time without notice

Technical Specifications (continued)

Green Technology:
Mercury and UV free. RoHS-compliant components.

Installation

Mounting:
Recessed ceiling

LED Characteristics

LEDs:
Long-life, high-efficacy, surface-mount LEDs

Color Stability:
LED color temperature is warrantied to Shift no more than 200K in color temperature over a 5-year period

Color Uniformity:
RAB's range of Correlated Color Temperature follows the guidelines of the American National Standard for Specifications for the Chromaticity of Solid State Lighting (SSL) Products, ANSI C78.377-2017.

Performance

Lifespan:
100,000-Hour LED lifespan based on IESlm-80 results and TM-21 calculations

Other

5-Year, No-Compromise Warranty:
RAB warrants that our LED products will be free from defects in materials and workmanship for a period of five (5) years from the date of delivery to the end user, including coverage of light output, color stability, driver performance and fixture finish. RAB's warranty is subject to all terms and conditions found at rablighting.com/warranty.

Dimensions

Copyright © 2026 RAB Lighting All Rights Reserved Note: Specifications are subject to change at any time without notice

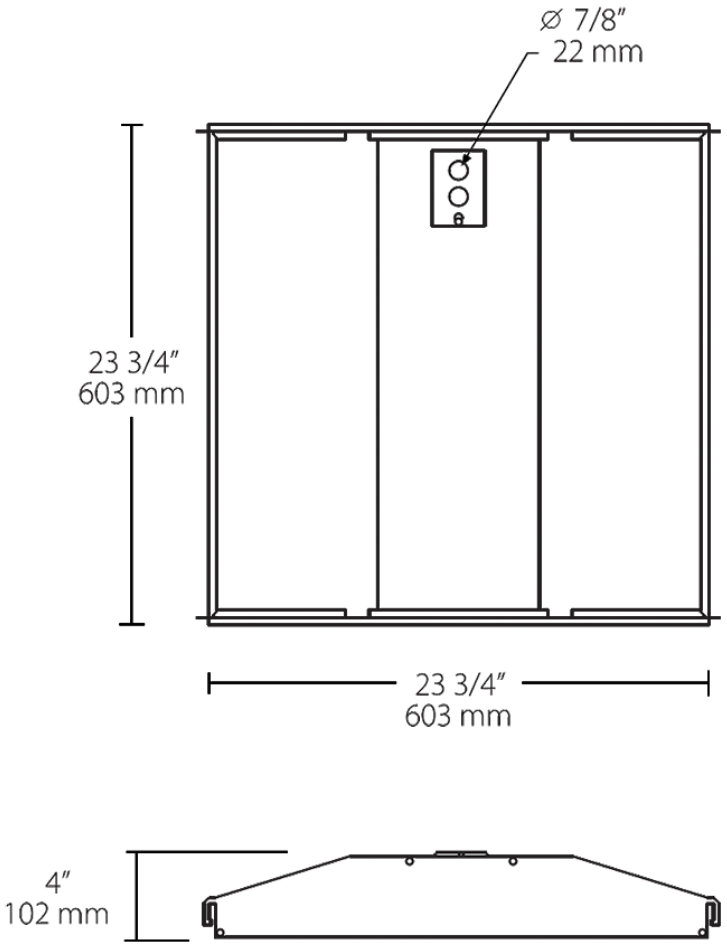

Ordering Matrix

Family	Size/Wattage	Color Temp	Driver	Options	Battery Backup
SWISHFA	2X2		/D10		/E2
	2X2 = 2' x 2', 39/29/19W **1X4 =** 1' x 4', 39/29/19W **2X4 =** 2' x 4', 49/39/29W	**Blank =** 3500/4000/5000K CCT Adjustable	**/D10 =** 0-10V Dimming	**Blank =** No Option **/MVS =** Microwave Occupancy Sensor **/LC =** Lightcloud	**Blank =** No Option **/E2 =** Battery Backup

Copyright © 2026 RAB Lighting All Rights Reserved Note: Specifications are subject to change at any time without notice