GT500

RAB



Gotcha Sensor with 110° view, surge protection, 500, 600 & 1350 Watt switching capacity, auto test logic and manual override.

Color: Black

Weight: 0.6 lbs

Project:	Type:
Prepared By:	**Date:**

Technical Specifications

Compliance

UL Listed:
Suitable for wet locations

Electrical

Voltage:
120 or 277V AC 60 Hz

Power Consumption:
4W

Surge Protection:
Withstands up to 6000 volts

Wall Switch Manual Override:
Two flip logic prevents activation by momentary power outages. Override resets to auto after 6 hours or at dawn. No extra wiring needed.

Switching Capacity:
600W @ 120VAC Electronic Ballast (LED)
1350W @ 277VAC Electronic Ballast (LED)

Sensor Settings

Time Adjustment:
10 seconds to 15 minutes

Detector Sensitivity:
Adjustable from 100% to 50%

Sensor Housing:
Made of tough, corrosion resistant polycarbonate

Detection:
110° view

Construction

Floodlights:
Made of tough, corrosion-resistant polycarbonate. For extra or replacement floodlights, order cat# TUFFY in your choice of color. Accepts PAR-38 lamps, medium base, 150W max. Lamps not included.

Other

Warranty:
5-year sensor warranty

Copyright © 2026 RAB Lighting All Rights Reserved Note: Specifications are subject to change at any time without notice

Dimensions

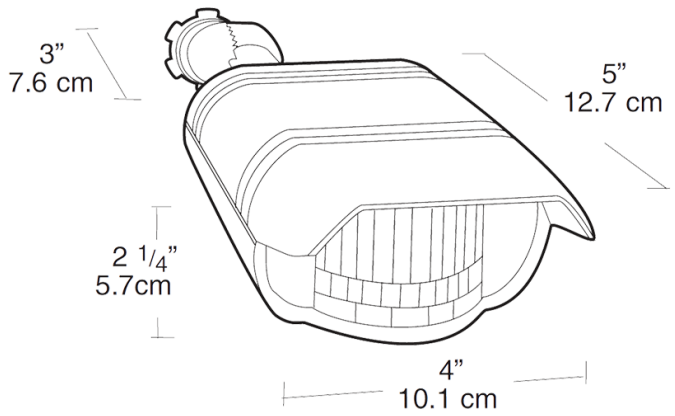

Features

- 500, 600 & 1350 Watt Switching Capacity
- New vandal resistant grill
- 6000 volt surge protection
- Temperature compensation
- Protected manual override with auto reset
- Double look down lens
- 5-Year Sensor Warranty

Copyright © 2026 RAB Lighting All Rights Reserved Note: Specifications are subject to change at any time without notice