ALED5T78W



High output LED pole top area light with IES type V circular distribution. Wide and uniform 360 degree pattern ideal for large outdoor areas such as parking lots, corporate parks, and retail settings.

Color: White

Weight: 23.2 lbs

Project:	**Type:**
Prepared By:	**Date:**

Driver Info

Type	Constant Current
120V	0.68A
208V	0.39A
240V	0.34A
277V	0.30A
Input Watts	80.4W

LED Info

Watts	78W
Color Temp	5000K (Cool)
Color Accuracy	70 CRI
L70 Lifespan	100,000 Hours
Lumens	9,530 lm
Efficacy	118.5 lm/W

Technical Specifications

Compliance

UL Listed:
Suitable for wet locations

IP Rating:
Ingress protection rating of IP66 for dust and water

IESNA LM-79 & LM-80 Testing:
RAB LED luminaires and LED components have been tested by an independent laboratory in accordance with IESNA LM-79 and LM-80.

DLC Listed:
This product family is listed with the DesignLights Consortium (DLC). Individual SKUs within this family may carry either a DLC Standard or DLC Premium qualification. Please refer to the individual product specification sheet or the DLC Qualified Products List (QPL) at designlights.org to confirm the qualification status of a specific SKU prior to specification or purchase.

LED Characteristics

LEDs:
6x13W high-output, long-life LEDs

Color Consistency:
7-step MacAdam Ellipse binning to achieve consistent fixture-to-fixture color

Color Stability:
LED color temperature is warrantied to Shift no more than 200K in color temperature over a 5-year period

Color Uniformity:
RAB's range of Correlated Color Temperature follows the guidelines of the American National Standard for Specifications for the Chromaticity of Solid State Lighting (SSL) Products, ANSI C78.377-2017.

Performance

Lifespan:
100,000-Hour LED lifespan based on IESlm-80 results and TM-21 calculations

Wattage Equivalency:
Equivalent to 250W Metal Halide

Construction

Cold Weather Starting:
The minimum starting temperature is -40°F (-40°C)

Maximum Ambient Temperature:
Suitable for use in up to 104°F (40°C)

Effective Projected Area (EPA):
EPA = 1.2

Housing:
Precision die-cast aluminum, Type V distribution

Support Arms:
Extruded aluminum

Lens:
Clear tempered glass lens

Reflector:
Specular vacuum-metallized polycarbonate, Type V distribution

Gaskets:
High-temperature silicone

Finish:
Formulated for high durability and long-lasting color

Green Technology:
Mercury and UV free. RoHS-compliant components.

Optical

BUG Rating:
B3 U0 G2

Other

Patents:
The designs of the ALED5T78 are protected by patents pending in US, Canada, China, Taiwan and Mexico

Copyright © 2026 RAB Lighting All Rights Reserved Note: Specifications are subject to change at any time without notice

Technical Specifications (continued)

5-Year, No-Compromise Warranty:
RAB warrants that our LED products will be free from defects in materials and workmanship for a period of five (5) years from the date of delivery to the end user, including coverage of light output, color stability, driver performance and fixture finish. RAB's warranty is subject to all terms and conditions found at rablighting.com/warranty.

Electrical

Drivers:
Constant Current, Class 2 with 6kV surge protection, 120-277VAC, 50/60 Hz, 120V: 0.68A, 208V: 0.39A, 240V: 0.34A, 277V: 0.30A

THD:
2.45% at 120V, 8.39% at 277V

Power Factor:
99.9% at 120V, 96.5% at 277V

Dimensions

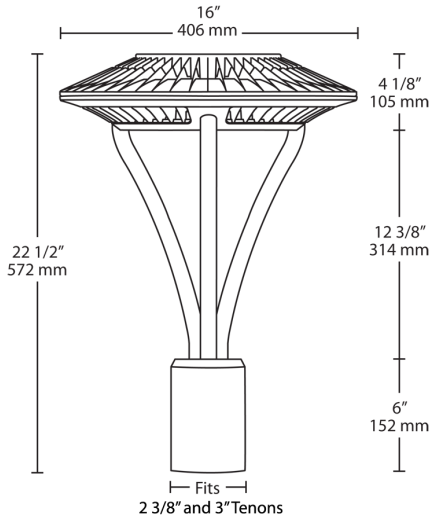

Features

- IES type V (circular) distribution
- 100,000-hour LED lifespan
- Compatible with standard 2 3/8" and 3" tenons
- "Air-Flow" fins for maximum heat dissipation
- 5-Year, No-Compromise Warranty

Ordering Matrix

Family	Distribution	Wattage	Color Temp	Finish	Driver Option	Options	Other Options
ALED	5T	78		W			
	5T = Type V	**26 =** 26W **52 =** 52W **78 =** 78W	**Blank =** 5000K Cool **N =** 4000K Neutral **Y =** 3000K Warm	**Blank =** Bronze **W =** White **K =** Black **RG =** Gray	**Blank =** 120-277V **/480/D10 =** 480V w/Dimmable **/480 =** 480V **/BL =** Bi-Level **/D10 =** Dimmable	**Blank =** No Option **/LC =** Lightcloud **/PCT =** 120-277V Twistlock Photocell **/PCT4 =** 480V Twistlock Photocell	**Blank =** Standard **USA =** BAA Compliant

Copyright © 2026 RAB Lighting All Rights Reserved Note: Specifications are subject to change at any time without notice