WP2XFU100



Color: Bronze

Weight: 7.9 lbs

Project:	**Type:**
Prepared By:	**Date:**

Driver Info

Type	Constant Current
120V	0.83A/0.67A/0.50A
208V	0.48A/0.38A/0.29A
240V	0.44A/0.35A/0.26A
277V	0.38A/0.30A/0.23A
Input Watts	59.3-102.7W

LED Info

Watts	100/80/60W
Color Temp	3000/4000/5000K
Color Accuracy	82-84 CRI
L70 Lifespan	100,000 Hours
Lumens	8,906-15,364 lm
Efficacy	141.7-158.6 lm/W

Technical Specifications

Field Adjustability

Field Adjustable:
Field Adjustable Light Output:
100W/80W/60W (factory default 100W)
Color temperature (selectable by 3000K, 4000K and 5000K)

Compliance

UL Listed:
Suitable for wet locations

IESNA LM-79 & LM-80 Testing:
RAB LED luminaires and LED components have been tested by an independent laboratory in accordance with IESNA LM-79 and LM-80.

IP Rating:
Ingress protection rating of IP65 for dust and water

Performance

Lifespan:
100,000-Hour LED lifespan based on IESlm-80 results and TM-21 calculations

Wattage Equivalency:
100W: 400W Metal Halide
80W: 400W Metal Halide
60W: 250W Metal Halide

LED Characteristics

LEDs:
Long-life, high-efficiency, surface-mount LEDs

Electrical

Driver:
100W: Constant Current, Class 1, 120-277V, 50/60 Hz, 120V: 0.83A, 208V: 0.48A, 240V: 0.44A, 277V: 0.38A
80W: Constant Current, Class 1, 120-277V, 50/60 Hz, 120V: 0.67A, 208V: 0.38A, 240V: 0.35A, 277V: 0.30A
60W: Constant Current, Class 1, 120-277V, 50/60 Hz, 120V: 0.50A, 208V: 0.29A, 240V: 0.26A, 277V: 0.23A

Dimming Driver:
Driver includes dimming control wiring for 0-10V dimming systems. Requires separate 0-10V DC dimming circuit. Dims down to 10%.

THD:
13.42% at 120V, 9..88% at 277V

Power Factor:
98.8% at 120V, 97% at 277V

Photocell:
120-277V selectable photocell that can be turned on and off.

Construction

Cold Weather Starting:
The minimum starting temperature is -40°F (-40°C)

Maximum Ambient Temperature:
Suitable for use in up to 122°F (50°C)

Housing:
Die-cast aluminum

Lens:
Tempered glass

Finish:
Formulated for high durability and long-lasting color

Green Technology:
Mercury and UV free. RoHS-compliant components.

Installation

Mounting:
Wall mount

Copyright © 2026 RAB Lighting All Rights Reserved Note: Specifications are subject to change at any time without notice

Technical Specifications (continued)

Other

5-Year Limited Warranty:
The RAB 5-year, limited warranty covers light output, driver performance and paint finish. RAB's warranty is subject to all terms and conditions found at rablighting.com/warranty.

Dimensions

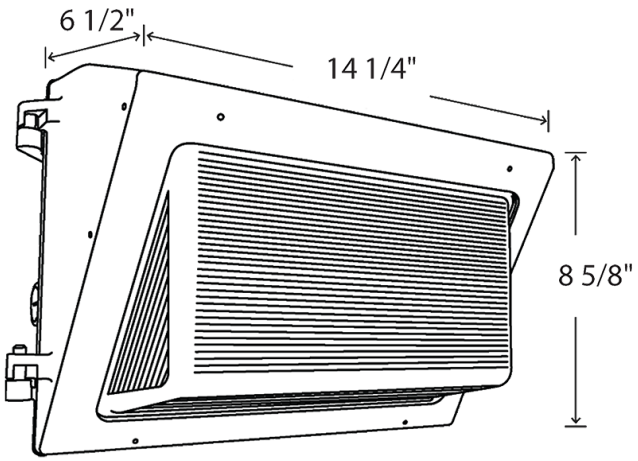

Features

IP65 Rated

100,000-Hour LED lifespan

5-Year, limited warranty

Ordering Matrix

Family	Wattage	Color Temp	Finish	Driver	Options
WP2XFU	100				
	29 = 29/20/15W **40** = 40/30/20W **60** = 60/45/35W **80** = 80/60/40W **100** = 100/80/60W	**Blank** = 3000/4000/5000K	**Blank** = Bronze	**Blank** = 120-277V, 0-10V Dimming	**Blank** = Selectable Photocell **/LC** = Lightcloud **/LCB** = Lightcloud Blue **/LCBS** = Lightcloud Blue w/PIR Sensor **/LCBS/MVS** = Lightcloud Blue w/MVS Sensor

Copyright © 2026 RAB Lighting All Rights Reserved Note: Specifications are subject to change at any time without notice