# A17-3T375



Color: Bronze

Weight: 24.2 lbs

| | |
|---|---|
| **Project:** | **Type:** |
| **Prepared By:** | **Date:** |

### Driver Info

| | |
|---|---|
| Type | Constant Current |
| 120V | 3.01A/2.41A/1.93A |
| 208V | 1.74A/1.39A/1.11A |
| 240V | 1.57A/1.25A/1.00A |
| 277V | 1.40A/1.12A/0.90A |
| Input Watts | 231.3-381.3W |

### LED Info

| | |
|---|---|
| Watts | 375/300/240W |
| Color Temp | 3000/4000/5000K |
| Color Accuracy | 82-84 CRI |
| L70 Lifespan | 100,000 Hours |
| Lumens | 37,312-59,359 lm |
| Efficacy | 148.7-168.7 lm/W |

## Technical Specifications

### Compliance

**UL Listed:**
Suitable for wet locations

**IESNA LM-79 & LM-80 Testing:**
RAB LED luminaires and LED components have been tested by an independent laboratory in accordance with IESNA LM-79 and LM-80.

**IP Rating:**
Ingress protection rating of IP65 for dust and water

**DLC Listed:**
This product family is listed with the DesignLights Consortium (DLC). Individual SKUs within this family may carry either a DLC Standard or DLC Premium qualification. Please refer to the individual product specification sheet or the DLC Qualified Products List (QPL) at designlights.org to confirm the qualification status of a specific SKU prior to specification or purchase.

### Electrical

**Driver:**
375W: Constant Current, Class 1, 120-277V, 50/60 Hz, 120V: 3.01A, 208V: 1.74A, 240V: 1.57A, 277V: 1.40A
300W: Constant Current, Class 1, 120-277V, 50/60 Hz, 120V: 2.41A, 208V: 1.39A, 240V: 1.25A, 277V: 1.12A
240W: Constant Current, Class 1, 120-277V, 50/60 Hz, 120V: 1.93A, 208V: 1.11A, 240V: 1.00A, 277V: 0.90A

**Dimming Driver:**
Driver includes dimming control wiring for 0-10V dimming systems. Requires separate 0-10V DC dimming circuit. Dims down to 10%.

**Surge Protection:**
6 kV

### Performance

**Lifespan:**
100,000-Hour LED lifespan based on IESlm-80 results and TM-21 calculations

### Optical

**IES Classification:**
The Type III distribution is ideal for roadway, general parking and other area lighting applications where a larger pool of lighting is required. It is intended to be located near the side of the area, allowing the light to project outward and fill the area.

**BUG Rating:**
B5 U0 G5

### LED Characteristics

**LEDs:**
Long-life, high-efficiency, surface-mount LEDs

**Color Uniformity:**
RAB's range of Correlated Color Temperature follows the guidelines of the American National Standard for Specifications for the Chromaticity of Solid State Lighting (SSL) Products, ANSI C78.377-2017.

### Construction

**Cold Weather Starting:**
The minimum starting temperature is -40°F (-40°C)

**Maximum Ambient Temperature:**
Suitable for use in up to 104°F (40°C)


Copyright © 2026 RAB Lighting All Rights Reserved Note: Specifications are subject to change at any time without notice

## Technical Specifications (continued)

**Lens:**
Polycarbonate lens

**Housing:**
Die-cast aluminum housing, lens frame and mounting arm

**Vibration Rating:**
3G vibration rating per ANSI C136.31

**Effective Projected Area (EPA) (Without Shield):**
1 Fixture: 0.8 $ft^2$
2 Fixtures at 90°: 1.18 $ft^2$
2 Fixtures at 180°: 1.6 $ft^2$
3 Fixtures at 90°: 1.98 $ft^2$
4 Fixtures at 90°: 1.98 $ft^2$

**Effective Projected Area (EPA) (With Shield):**
1 Fixture: 0.84 $ft^2$
2 Fixtures at 90°: 1.59 $ft^2$
2 Fixtures at 180°: 1.68 $ft^2$
3 Fixtures at 90°: 2.43 $ft^2$
4 Fixtures at 90°: 2.43 $ft^2$

**Finish:**
Formulated for high durability and long-lasting color

**Green Technology:**
Mercury and UV free. RoHS-compliant components.

### Installation

**Mounting:**
Universal mounting arm compatible for hole spacing patterns from 1" to 5 1/2" center to center. Round Pole adapter plate included as a standard. Easy slide and lock to mount fixture with ease. Round pole diameter must be >4" to mount fixtures at 90° orientation.

### Other

**5-Year Limited Warranty:**
The RAB 5-year, limited warranty covers light output, driver performance and paint finish. RAB's warranty is subject to all terms and conditions found at rablighting.com/warranty.


Copyright © 2026 RAB Lighting All Rights Reserved Note: Specifications are subject to change at any time without notice

## Dimensions

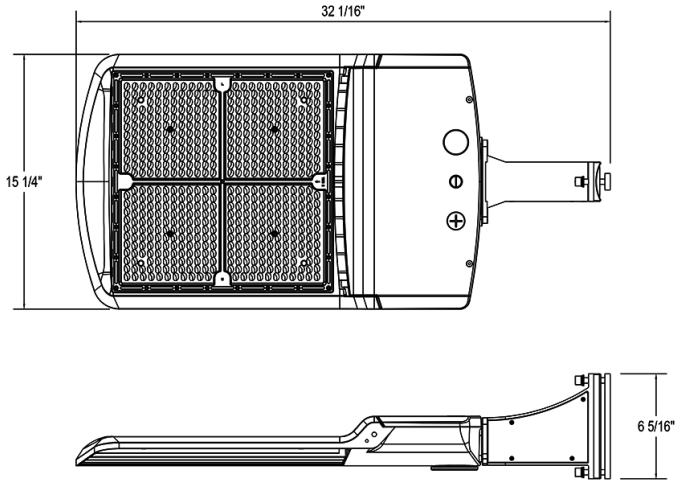


## Features

- 0-10V Dimming, standard
- 100,000-hour LED lifespan
- 5-Year, limited warranty

## Ordering Matrix

| Family | | Distribution | Wattage/Lumens | Mounting | Color Temp | Finish | Driver | Options |
|---|---|---|---|---|---|---|---|---|
| A17 | – | 3T | 375 | | | | | |
| | | **4T =** Type IV<br>**5T =** Type V<br>**3T =** Type III | **70 =** 70/60/50W<br>**100 =** 100/80/60W<br>**150 =** 150/120/100W<br>**200 =** 200/180/160W<br>**300 =** 300/240/200W<br>**375 =** 375/300/240W<br>**480 =** 480/400/320W | **SF =** Slipfitter (Factory installed SF available in 150W) [1]<br>**Blank =** Universal Pole Mount | **Blank =** 3000/4000/5000K CCT Adjustable | **Blank =** Bronze | **Blank =** 120-277V, 0-10V Dimming<br>**/480 =** 480V, 0-10V Dimming | **Blank =** No Option<br>**/3PRS =** 3-pin Receptacle and Shorting Cap<br>**/7PRS =** 7-pin Receptacle and Shorting Cap<br>**/MVS =** Microwave Motion Sensor<br>**/LCBS =** Lightcloud Blue w/PIR Sensor<br>**/LCBS/MVS =** Lightcloud Blue w/MVS Sensor |

[1] *1Slipfitter Mount available on 150W only*

*Type II distribution available as special order.*

*Wall mount and roadway arm mount available as optional accessories.*


Copyright © 2026 RAB Lighting All Rights Reserved Note: Specifications are subject to change at any time without notice