WFRL4R99FA120WS

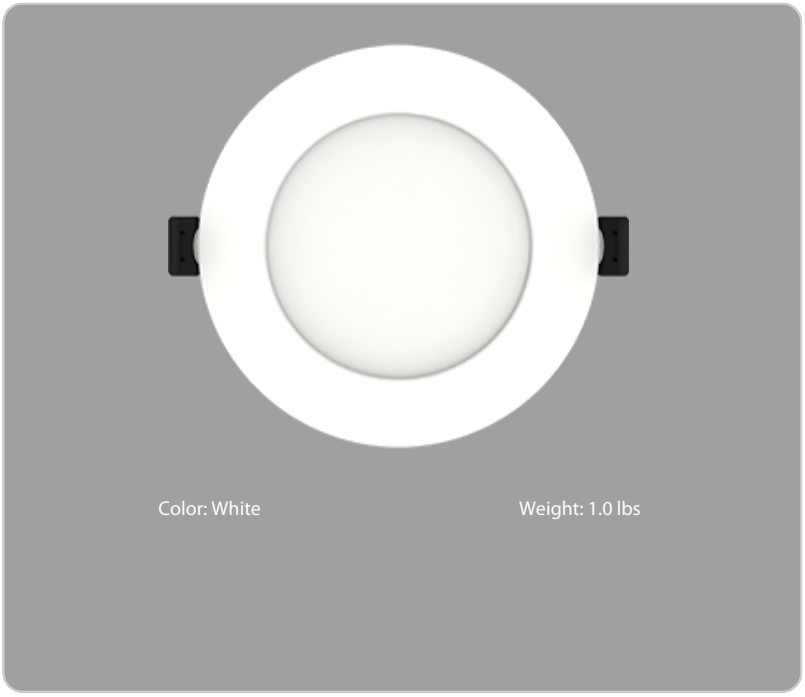

Color: White

Weight: 1.0 lbs

Project:	**Type:**
Prepared By:	**Date:**

Driver Info

Type	Constant Current
120V	0.10A
208V	N/A
240V	N/A
277V	N/A
Input Watts	9W

LED Info

Watts	9W
Color Temp	2700/3000/3500/4000/5000K
Color Accuracy	90 CRI
L70 Lifespan	N/A
Lumens	700 lm
Efficacy	77.8

Technical Specifications

Performance

Product Type:
Round, Edge-Lit Wafer

Description:
Round, edge-lit wafers with a slim form factor and selectable color temperatures. Available in 3", 4", 5", 6", and 8" models with either smooth or baffle trim, all with 90 CRI and TRIAC/ELV dimming.

Wattage Equivalency:
60W Incandescent

Input Wattage:
9W

Lumens (Nominal):
750lm

Lumens (Measured):
696lm @ 2700K; 725lm @ 3000K; 735lm @ 3500K; 780lm @ 4000K; 760lm @ 5000K

Efficacy:
77lm/W @ 2700K;
81lm/W @ 3000K;
82lm/W @ 3500K;
87lm/W @ 4000K;
84lm/W @ 5000K

L70 Lifespan:
50,000-Hour LED lifespan based on IES LM-70 results

Electrical

Driver:
Constant Current, Class 2 60 Hz; 120V: 100mA

THD:
≤20%

Power Factor:
≥0.9

Dimmable:
Yes, dimmable down to 10% on compatible TRIAC/ELV dimming systems. See Dimmer Compatibility List.

Input Voltage:
120V

Operating Frequency:
60 Hz

Operating Temperature:
-22°F to 104°F (-30°C to 40°C)

LED Characteristics

Beam Angle:
110°±10°

Color Temperature:
Field adjustable via dip switch
2700/3000/3500/4000/5000K

Color Accuracy (CRI):
>90 CRI

R9 Value:
High color performance with R9 greater than 50

Color Consistency:
<4-step (2700K & 5000K) MacAdam Ellipse binning to achieve consistent fixture-to-fixture color

Color Stability:
LED color temperature is warrantied to Shift no more than 200K in color temperature over a 5-year period

Color Uniformity:
RAB's range of Correlated Color Temperature follows the guidelines of the American National Standard for Specifications for the Chromaticity of Solid State Lighting (SSL) Products, ANSI C78.377-2017.

Copyright © 2026 RAB Lighting All Rights Reserved Note: Specifications are subject to change at any time without notice

Technical Specifications (continued)

Installation

Remote Driver/Junction Box:
Die-formed metal driver / junction box with captive hinged junction box cover. Listed for maximum of (4) 12AWG through branch circuit conductor suitable for 90° C permitted in box. Easy to wire in 2in/2out (plus ground) applications. (4) conduit pry-outs. (3) quick snap-in connectors for quick and reliable line voltage connections. Integral mounting facilitates direct mounting to building structure or mounting frame.

Mounting:
Recessed, no housing required

Construction

Size:
4"

Shape:
Round

Finish:
White

Enclosure Material:
Metal+Plastic

Trim Style:
Smooth

Lens Finish:
Frosted

Lens:
Polycarbonate light diffuser distributes light evenly and smoothly for general lighting applications

Compliance

Listings:
UL Listed

Environment:
Suitable for use indoors and outdoors in dry, damp, or wet environments.

IC Rated:
No

Air Tight:
Housing certified Air Tight as per ASTM E283

Energy Star Approved:
This product is ENERGY STAR® Certified.

Energy Star ID:
3543885

DLC Listed:
No

Certification Model Number:
DLW0053(WFRL4R99FA120WS)

California Title 20 Compliant:
Can be used to conform with the requirements of California Title 20

California Title 24 JA8 Compliant:
Can be used to conform with the requirements of California Title 24 Part 6.

California Energy Commission (CEC) Status:
Lawful for Sales in California

NEC Compliant:
Suitable for use in closets. Compliant with NEC Sec. 410.16 (A)(1) and 410.16 (C3).

IESNA LM-79 & LM-80 Testing:
RAB LED luminaires and LED components have been tested by an independent laboratory in accordance with IESNA LM-79 and LM-80.

RoHS:
Mercury and UV free. RoHS-compliant components.

FCC:
Complies with Part 15 of the FCC Rules

Trade Agreements Act Compliant:
This product is a product of Cambodia and a "designated country" end product that complies with the Trade Agreements Act

Other

Compatible Products:
WFRL-GOOF-4R-6R-W
4"-6" Goof ring round white

WFRL-TRIM-4R-BS
4" Color trim round smooth black

WFRL-TRIM-4R-BRS
4" Color trim round smooth bronze

WFRL-TRIM-4R-BNS
4" Color trim round smooth brushed nickel

DLPLATE/WFR3468/NB
Mounting plate for 3", 4", 6", 8" with nailer bar

DLPLATE/WFR3456
Mounting plate for 3", 4", 5", 6" with nailer bar

DLPLATE/WFR4/NB/CL
Mounting plate for 4" with nailer bar and drywall collar

DLPLATE/WFR4
Mounting plate for 4" wafer

EXTCBL-FA-6
6' Extension cable

EXTCBL-FA-12
12' Extension cable

EXTCBL-FA-20
20' Extension cable

DRI-25-EMGR-DC
Emergency driver 100-277V 25W

DRI-21-EMGR-DC-D10
Emergency driver 100-277V 21W 0-10V T20

5-Year, No-Compromise Warranty:
RAB warrants that our LED products will be free from defects in materials and workmanship for a period of five (5) years from the date of delivery to the end user, including coverage of light output, color stability, driver performance and fixture finish. RAB's warranty is subject to all terms and conditions found at rablighting.com/warranty.

Copyright © 2026 RAB Lighting All Rights Reserved Note: Specifications are subject to change at any time without notice

WFRL4R99FA120WS

Dimensions

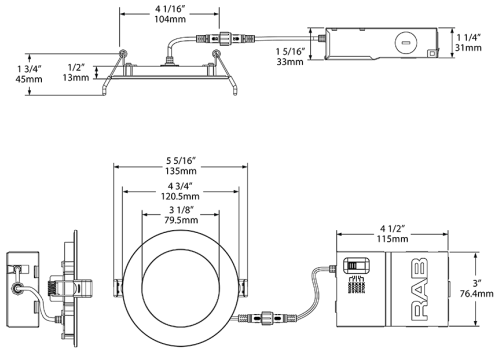

Features

- 5 color temperatures in 1 SKU (2700K, 3000K, 3500K, 4000K, 5000K)
- Super slim edge-lit fixture for thin fixture depth
- No recessed housing or J-box required
- New construction or retrofit applications
- UL wet location rated
- Smooth diffused uniform light distribution
- Dimmable down to 10% on compatible dimmers
- Spring loaded retention clips
- Robust, die cast aluminum construction
- IC and airtight rated
- 5-Year, No-Compromise Warranty

Ordering Matrix

Family	Size	Shape	Wattage	CRI/Color Temp	Driver	Finish	Trim	Depth
WFRL	4	R	9	9FA	120	W	S	
	4 = 4" **5 =** 5" **6 =** 6" **8 =** 8" **3 =** 3"	**R =** Round **S =** Square	**14 =** 14W **23 =** 23W **13 =** 13W **12 =** 12W **10.5 =** 10.5W **9 =** 9W **6 =** 6W	**9FA =** 90 CRI, 2700/3000/3500/4000/5000K CCT Adjustable **9CCT =** 90 CRI, 2700/3000/3500/4000/5000K CCT Adjustable	**120 =** 120V **D =** 120V/277V	**W =** White **B =** Black	**B =** Baffle **S =** Smooth	**Blank =** Standard **S =** Shallow

3" only available in round, 120V, and 6W
4" models only available with 120V. 120-277V driver sold separately. Available wattages are 9W & 10.5W.
4" shallow wafer only available with baffle trim and 9W
5" models only available in round,120V, and 12W
6" standard 120V only available in 13W and 14W
6" standard 120-277V only available in 13W
6" shallow wafer only available with baffle trim and 13W
8" wafer only available in 23W

Copyright © 2026 RAB Lighting All Rights Reserved Note: Specifications are subject to change at any time without notice