A22SFB



Color: Black

Weight: 1.6 lbs

Project:	**Type:**
Prepared By:	**Date:**

Driver Info

Type	N/A
120V	N/A
208V	N/A
240V	N/A
277V	N/A
Input Watts	N/A

LED Info

Watts	N/A
Color Temp	5000K
Color Accuracy	N/A
L70 Lifespan	100,000 Hours
Lumens	N/A
Efficacy	N/A

Technical Specifications

Performance

Description :
Slipfitter Mount

Other

Compatible Products:
A22

Construction

Finish:
Formulated for high durability and long-lasting color

Compliance

Trade Agreements Act Compliant:
This product is a product of Cambodia and a "designated country" end product that complies with the Trade Agreements Act

Copyright © 2026 RAB Lighting All Rights Reserved Note: Specifications are subject to change at any time without notice

Dimensions

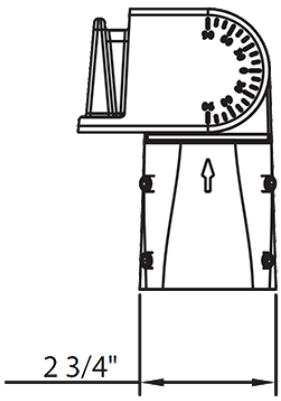

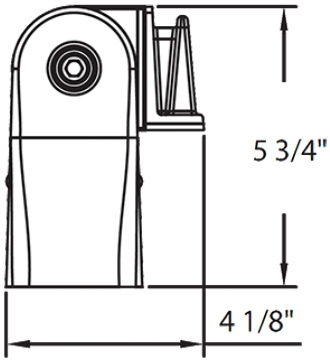

Copyright © 2026 RAB Lighting All Rights Reserved Note: Specifications are subject to change at any time without notice