16100 South Lathrop Avenue
Harvey, IL 60426
Office: 708-339-7814
Phone: 800-882-5543
Web: atkore.com/unistrut

DESIGN LOAD REPORT

Part Description: P2894 (Beam Clamp)

Report Date: August 10, 2022

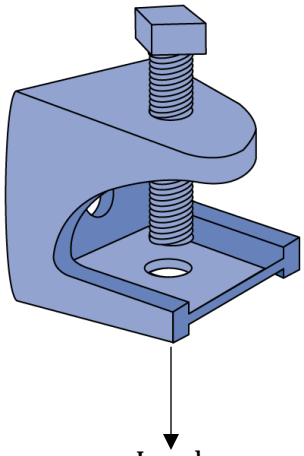

Part No.	Rod Size (in)	Design Load (lbs)
P2894-25	1/4"	150
P2894-37	3/8"	350
P2894-50	1/2"	400

NOTES

1. Safety factor = 2.5 based on ultimate strength of connection.
2. For use with beam flanges up to 3/4" thick.

Unistrut Engineering