16100 South Lathrop Avenue
Harvey, IL 60426
Office: 708-339-7814
Phone: 800-882-5543
Web: atkore.com/unistrut

DESIGN LOAD REPORT

Part Description: P1648S-P1653S (Beam Clamp)

Report Date: August 9, 2022

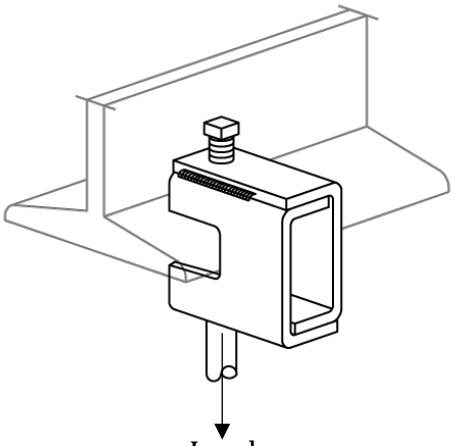

Part Number	Design Load (lbs)
P1648S	650
P1649S	650
P1650S	1,100
P1651S	1,600
P1652S	2,400
P1653S	2,400

NOTES

1. Design loads only apply to Unistrut brand products. Look for "UNISTRUT" on the part.
2. Safety factor = 2.5 based on ultimate strength of connection.
3. Set Screw Installation Torque:
    a. P1648S, P1649S: 60 in-lbs (7 N-m)
    b. P1650S, P1651S: 125 in-lbs (14 N-m)
    c. P1652S, P1653S: 250 in-lbs (28 N-m)

Unistrut Engineering