16100 South Lathrop Avenue
Harvey, IL 60426
Office: 708-339-7814
Phone: 800-882-5543
Web: atkore.com/unistrut

DESIGN LOAD REPORT

Part Description: P1386 (Beam Clamp)

Report Date: August 9, 2022

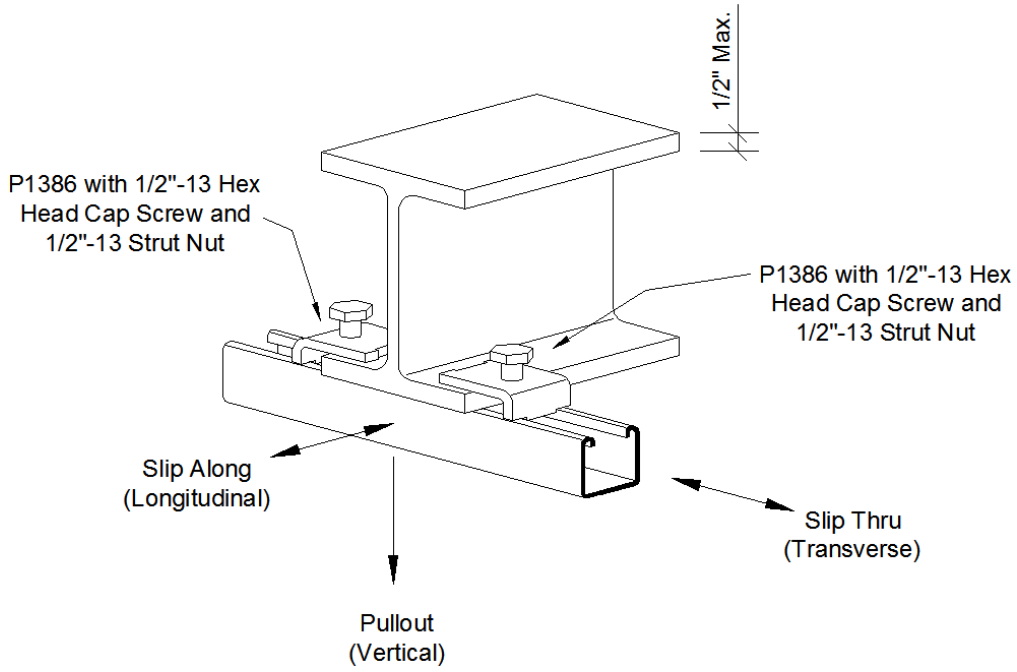

Average Ultimate Load (lbs)			Design Load (lbs)		
Pullout	Slip Along	Slip Thru	Pullout	Slip Along	Slip Thru
11,060	1,410	3,080	1,200	200	600

NOTES

1. Ultimate Loads From Test Reports, C-103, C-104 & C-249
2. Average Minimum Safety Factor of 5
3. Design Loads are for a 2 Clamp Installation
4. Must Use Clamps in Pairs

Unistrut Engineering