CABLOFIL WIRE MESH ACCESSORY

CF (& ZF) 54, 105, & 150 SERIES

INSERTPPxxx

(Replace 'xxx' with appropriate tray width in table)

PART NAME	'W' TRAY WIDTH
INSERTPP100*	3.81
INSERTPP150*	5.78
INSERTPP200*	7.62
INSERTPP300*	11.69
INSERTPP450*	17.59
INSERTPP500*	19.56
INSERTPP600*	23.50

**** INSERT COLOR SUFFIX***

- BL (Black)
- WH (White)
- YL (Yellow)

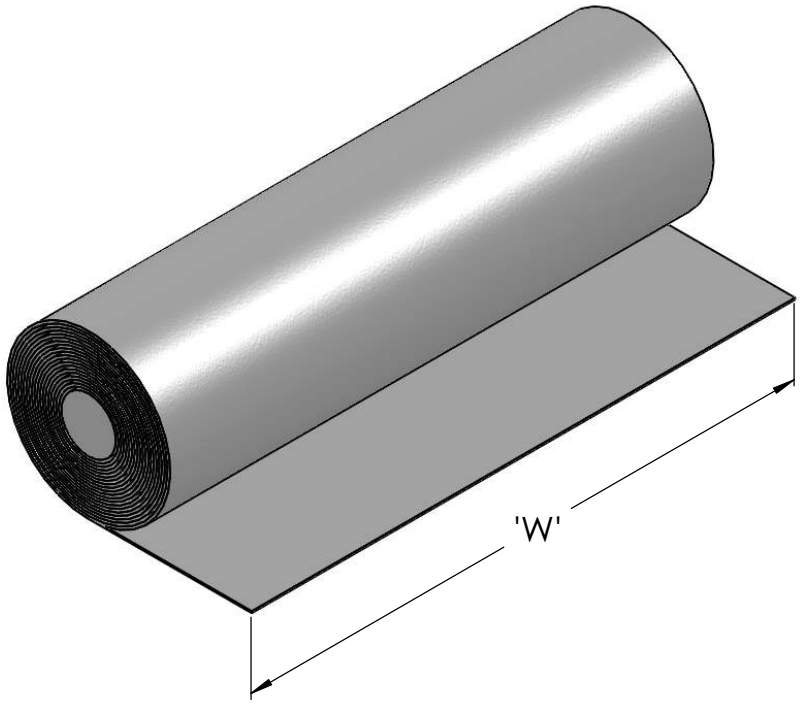

Material: POLYPROPYLENE
Thickness: .017"
Length: 200'
Quantity: 1
RoHS Compliant
Flame Class per UL 94 V-0
Outdoor UV: UL 746C - F1 rating
High Dielectric Strength
Low Moisture Absorption: <0.06%
200' Length rolls can easily be cut-to-length

"Copyright LNA, Inc. Drawings are proprietary and may not be copied or otherwise duplicated or used without express written permission."

CABCS0702

Legrand
8319 State Rt. 4
Mascoutah, IL 62258 USA
800-658-4641
618-566-3250
Fax618-566-4978
www.legrand.us/cablofil