CONTROL No: 120

| REV | DATE | ECO | DESCRIPTION | BY | CK | APP |
|---|---|---|---|---|---|---|
| - | 4-15-99 | N/A | INITIAL RELEASE | LDB | N/A | N/A |

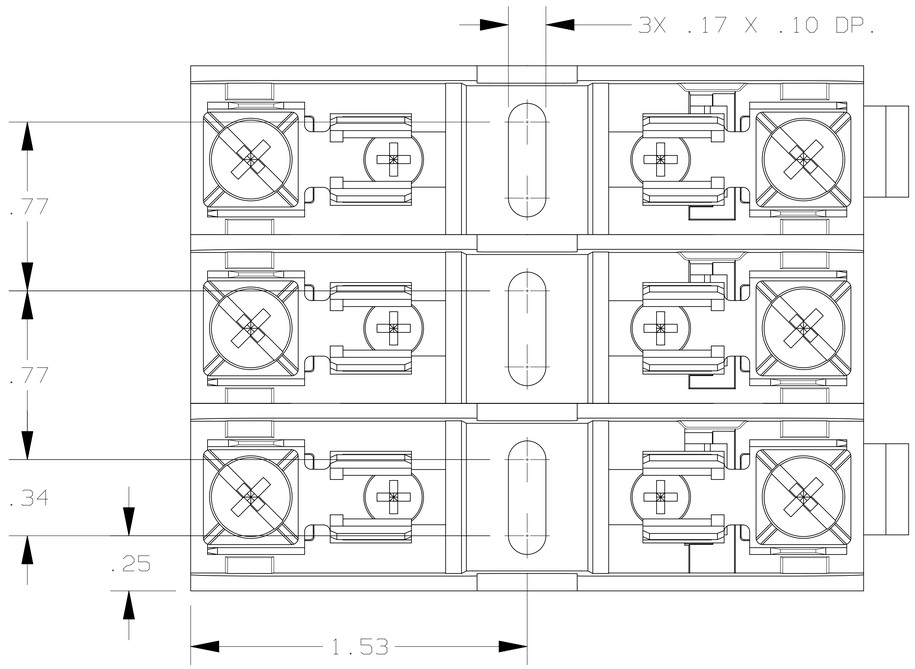


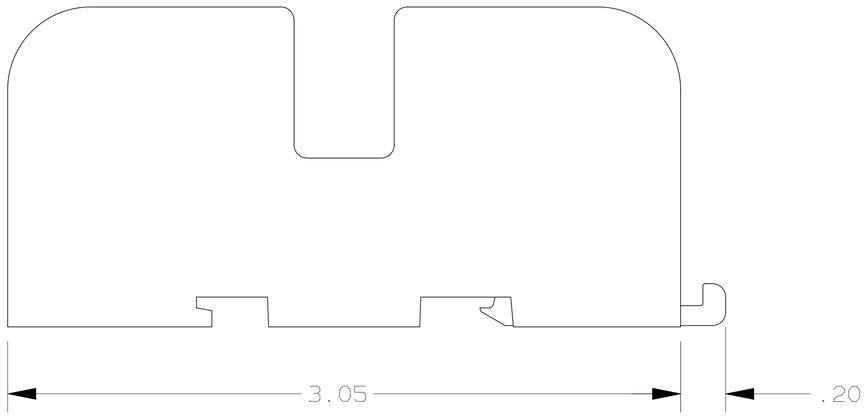


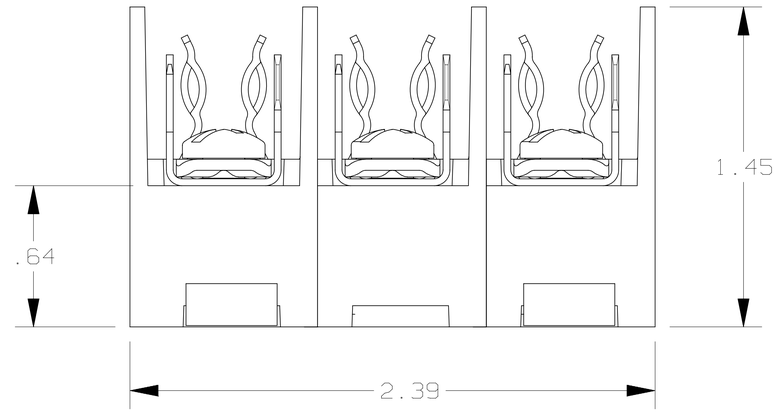


| P/N | CONN TYPE | RMS SYM RATING | TORQUE (IN-LBS) | WIRE | | U/L | | CSA |
|---|---|---|---|---|---|---|---|---|
| | | | | °C | TYPE | FILE NO. | GUIDE NO. | REPORT NO. |
| 40323G | PRESSURE | 100K | 20 | 60/75 | CU ONLY | E52283 | IZLT | LR32169 |

NOTES:

1. MATERIAL COMPOSITION AND RATING:
   BASE - THERMOPLASTIC 125°C RTI
2. ALL TOLERANCES ±.010 UNLESS OTHERWISE NOTED


MERSEN USA NEWBURYPORT-MA, LLC
374 MERRIMAC STREET
NEWBURYPORT,MA 01950


PRODUCT MANAGER

SIGN:

DATE:

DESIGN ENGINEER

SIGN:

DATE:

FUSE BLOCK, 480V-30A, 3 POLE
CLASS G

OUTLINE DIMENSIONS
NOT TO BE USED FOR PRODUCTION

700475