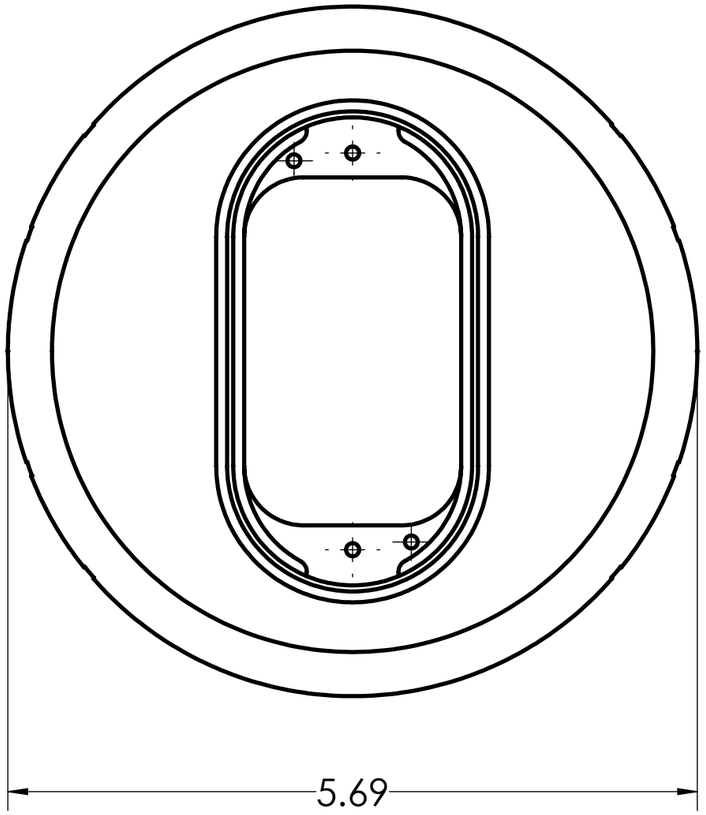

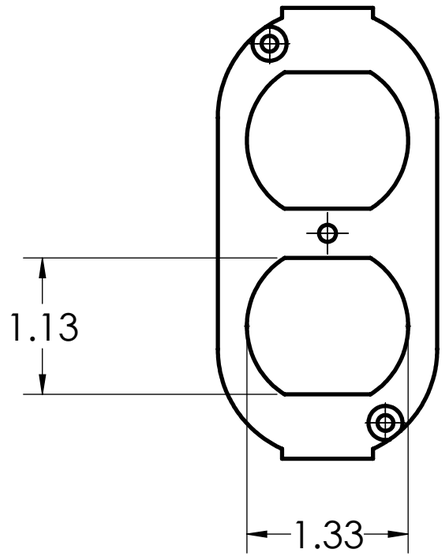

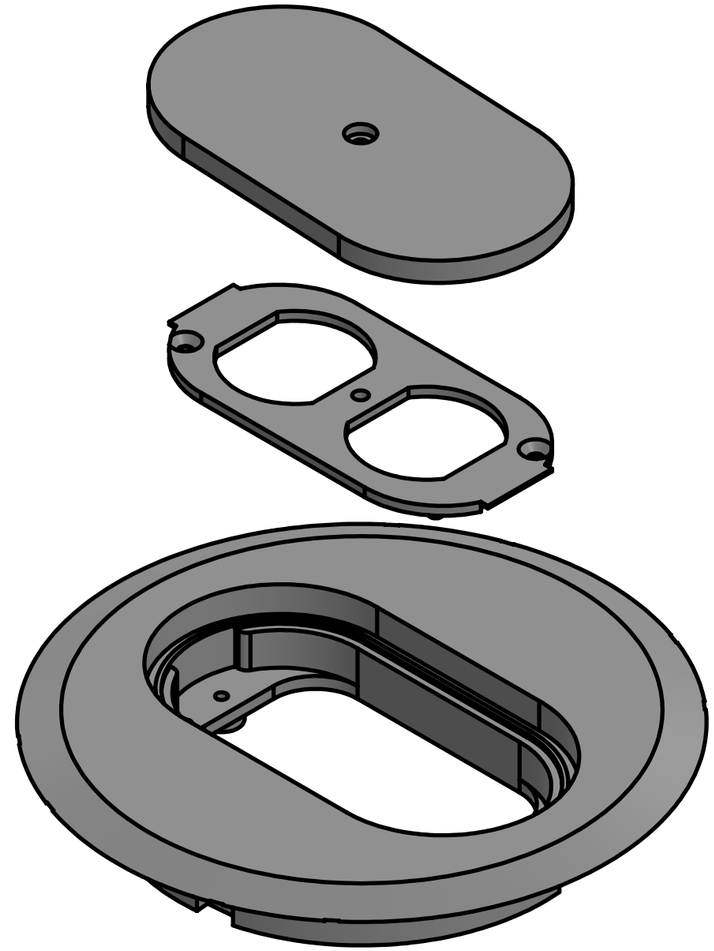

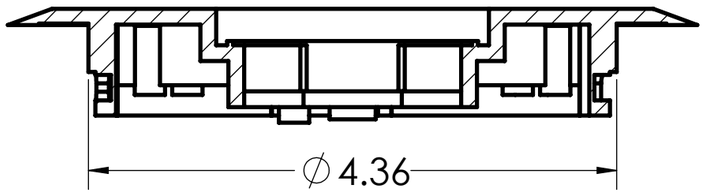

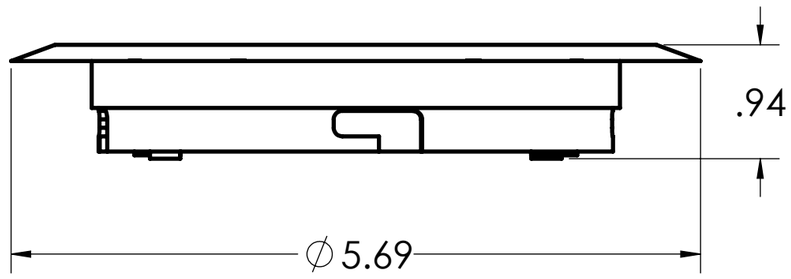

DIMENSIONS SHOWN ARE FOR REFERENCE AND ARE SUBJECT TO CHANGE WITHOUT NOTICE

Kraloy, a Division of Multi Fittings Corp.
under license

PART DESCRIPTION
FBDRCGr PVC DUP. REC. FOR 'F' BOX GREY KRALOY

PRODUCT CODE:		*SCALE:*
078618	*UNIT: INCHES UNLESS DUAL DIMENSION: INCH [METRIC]*	NTS
DRAWN: S.I.		