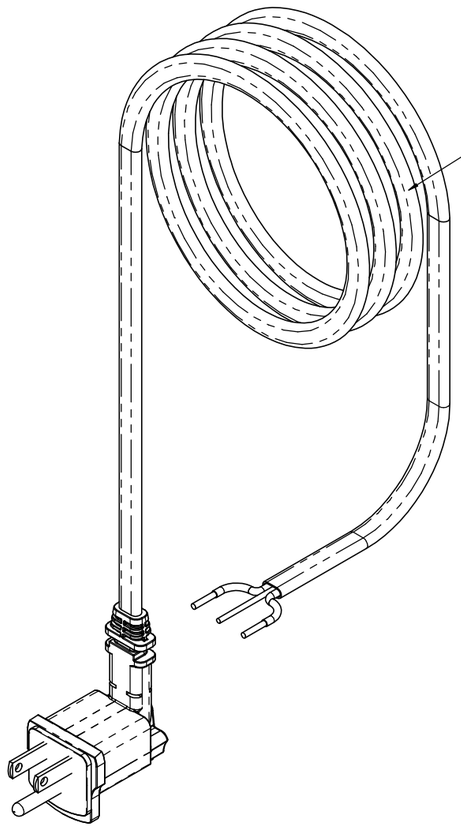

MOLDED PLUG ASSEMBLY AFFIXES TO POWER INLET STRAP ASSEMBLY

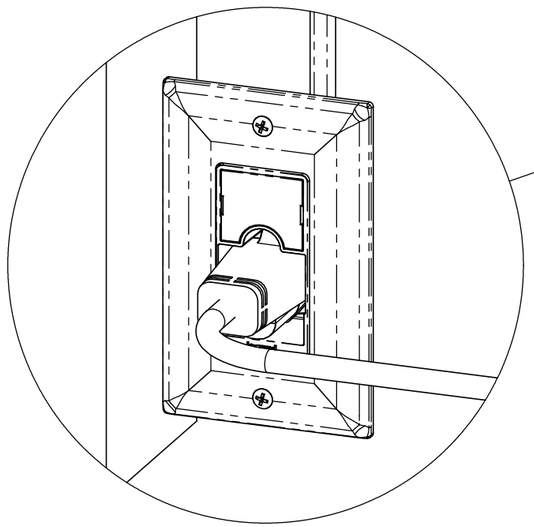

POWER INLET STRAP ASSEMBLY

MOLDED PLUG ASSEMBLY AFFIXES TO OUTLET VIA ROMEX WIRE TERMINATIONS INSIDE ELECTRICAL WIRING BOX

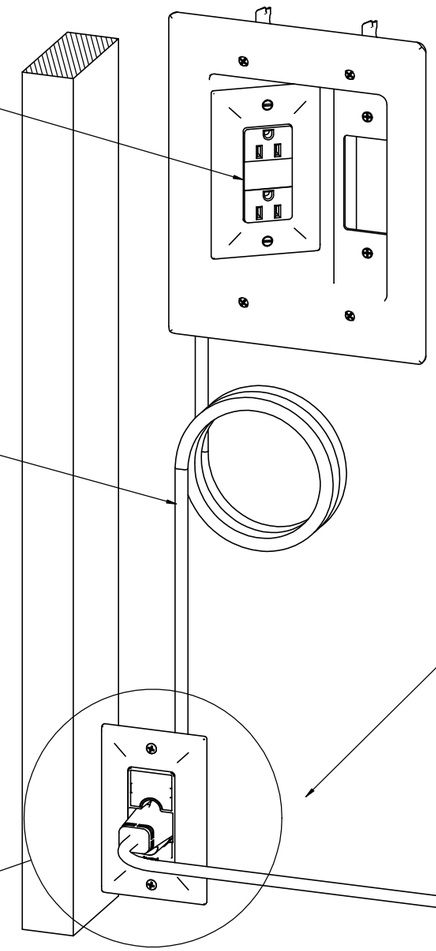

STANDARD WALL STUD BAY CAVITY

STANDARD 5/8" DRYWALL

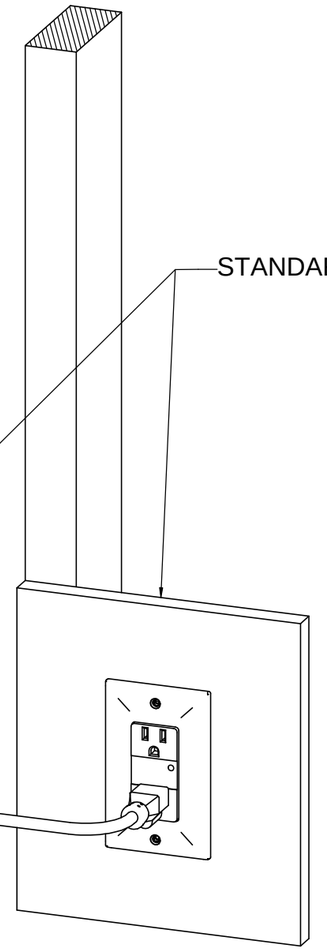

LEGRAND SUPPLIED POWER CORD

legrand®
P.O. Box 60907
Harrisburg, PA 17106-0907
1-800-321-2343

DESCRIPTION:

IN-WALL TV BOX

SIZE	DWG NO	REV
D	203101	A
SCALE 1:4	SURFACE AREA	SHEET 1 OF 2

PROPRIETARY AND CONFIDENTIAL
THE INFORMATION CONTAINED IN THIS DRAWING IS THE SOLE PROPERTY OF OnQ/LEGRAND. ANY REPRODUCTION IN PART OR AS A WHOLE WITHOUT THE WRITTEN PERMISSION OF OnQ/LEGRAND IS PROHIBITED.

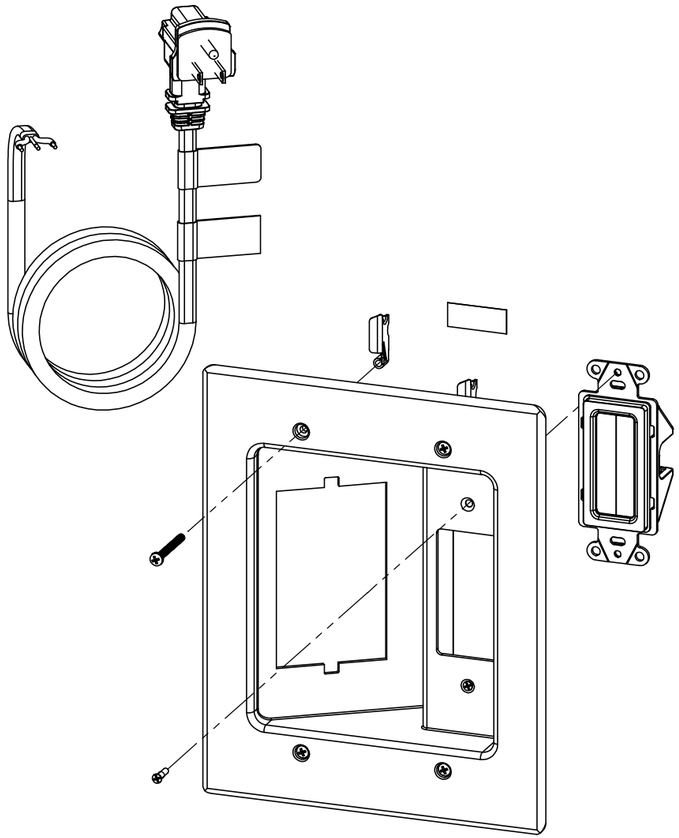

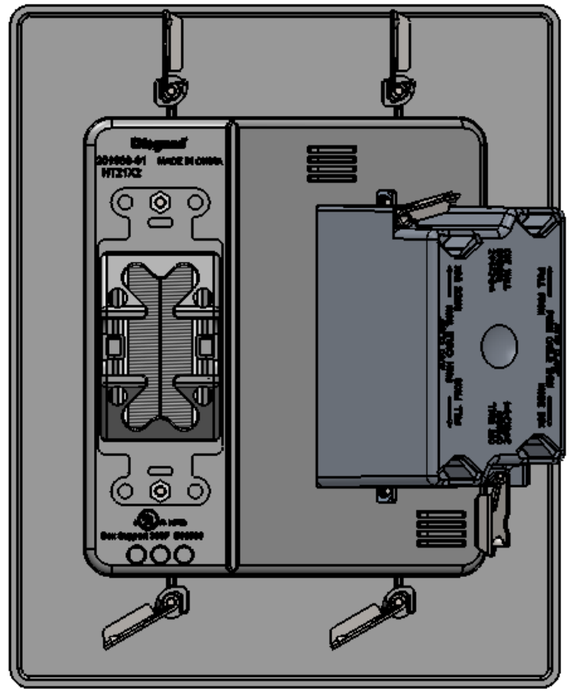

NOTE:
1. ALL THE CURL DIRECTION OF COPPER CORES IS SAME TO THE DIRECTION OF SCREW TIGHTENING

