Aerial Support Spacer Ties

Impact Resistant, Heat and UV Stabilized PA66HIRHSUV

Aerial Support Spacer Ties feature a built-in spacer to separate cables from support wires and prevent abrasion. A one-piece design combining the tie and spacer into one part reduces installation time and inventory costs. The outside serrations along the strap prevent damage to cables. Formulated from a special nylon blend, these ties are specifically suited for long-term outdoor use. The bent tail allows for quick and simple installation by hand.

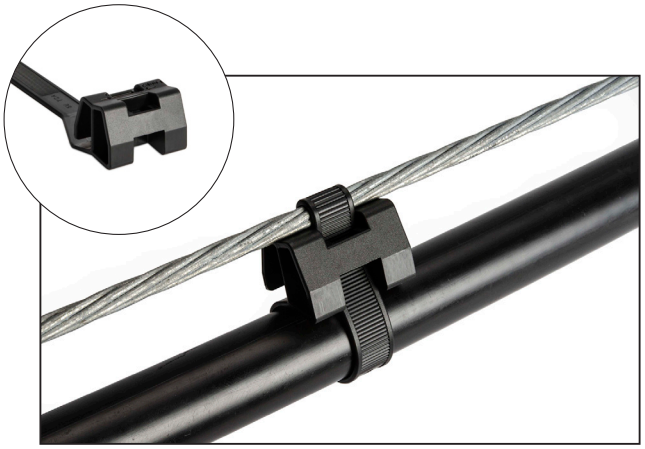

Features and Benefits

- UV resistant materials contain an inhibitor which prolongs the life of the tie in outdoor environments.
- One-piece design reduces installation time.
- Outside serrations prevent cable damage.

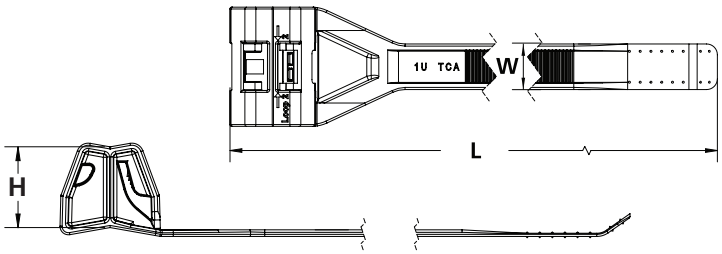

MATERIAL	Polyamide 6.6 high impact modified, heat and UV stabilized (PA66HIRHSUV)
Operating Temperature	-40°F to +221°F (-40°C to +105°C)
Flammability	UL 94 HB

HF ✓ RoHS ✓

PART NO.	TYPE	Min. Tensile Strength lbs. (N)	Length (L) in. (mm)	Max. Bundle Diameter in. (mm)	Width (W) in. (mm)	Height (H) in. (mm)	Material	Color	Pkg. Qty.	CoO
111-01671	**TAS120M**	120.0 (535.0)	12.4 (270.0)	2.8 (70.0)	0.5 (12.7)	0.8 (19.0)	PA66HIRHSUV	Black	500	US
111-01672	**TAS120L**	120.0 (535.0)	17.4 (420.0)	4.5 (114.0)	0.5 (12.7)	0.8 (19.0)	PA66HIRHSUV	Black	500	US

Dimensions are approximate and subject to technical changes. Use Part No. for ordering and Type for specification purposes.

Instructions

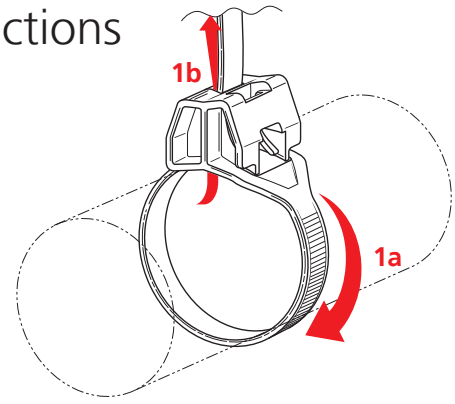

Wrap strap around the cable, with the strap serrations on the outside (**1a**) and insert strap upward through slot marked "Loop1" (**1b**). Pull strap tight around cable.

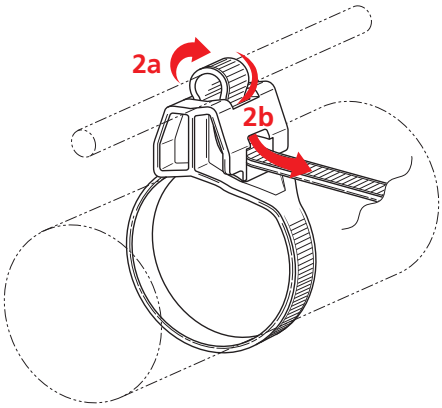

Loop strap over aerial support wire (**2a**) and downward through slot marked "Loop2" (**2b**). Pull strap and tighten around aerial support wire.

Aerial Support Ties

Aerial Support Tie Spacer

The stackable TAS Tie Spacer snaps onto the top of the single-piece TAS Aerial Cable Tie and into additional TAS spacer units. The stacking of spacers increases separation between the parallel messenger cable and fiber optic cables for aerial splice enclosure applications. Maintaining separation is important to avoid damage and create more streamlined access to the aerial splice enclosure. Use with TAS120M and TAS120L ties for easy installation.

Features and Benefits

- Adds separation in ½" increments, providing flexible spacing options as fiber cable approaches and enters aerial splice enclosure.
- Textured surfaces and V-shape corners make it easier to handle and assemble, even when wearing gloves.
- Cradle pocket styling creates nesting point for additional spacers, simplifying installation and assembly.
- Open front design creates visual orientation to assist with assembly while feeding bent tail TAS tie back through loop location for quicker installation.
- Snap-fit assembly quickly positions or removes TAS Tie or another spacer to create space along parallel aerial cabling, creating flexible positioning and adjustability.
- UV material is well suited for extended outdoor applications.



MATERIAL	Polyamide 6.6 high impact modified, heat and UV stabilized (PA66HIRHSUV)
Operating Temperature	-40°F to +230°F (-40°C to +110°C)
Flammability	UL 94 HB

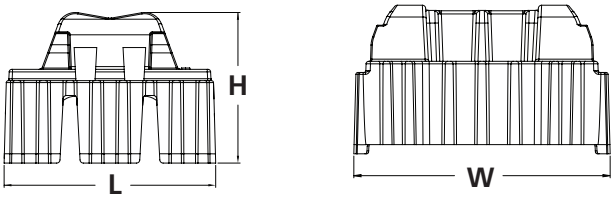

PART NO.	TYPE	Length (L) in. (mm)	Width (W) in. (mm)	Height (H) in. (mm)	Cable Tie Series	Color	Pkg. Qty.
151-04553	**TAS_Support_Spacer**	1.3 (31.8)	1.5 (39.1)	0.9 (22.7)	TAS120L, TAS120M	Black	50

Dimensions are approximate and subject to technical changes. Use Part No. for ordering and Type for specification purposes.

HellermannTyton North American Corporate Headquarters
7930 N. Faulkner Rd, PO Box 245017
Milwaukee, WI 53224-9517
Phone: (414) 355-1130, (800) 537-1512
Fax: (414) 355-7341, (800) 848-9866
email: corp@htamericas.com
www.hellermann.tyton.com
IATF 16949, AS9100, ISO 9001 and ISO14001 certified

HellermannTyton Canada
Unit #4, 205 Industrial Parkway North
Aurora, Ontario L4G 4C4 Canada
Phone: (800) 661-2461
Fax: (800) 390-3904
email: sales@hellermanntyton.ca

HellermannTyton Mexico
Anillo Periferico Sur 7980 Edificio 6A
Parque Industrial Tecnologico II
Santa María Tequepexpan
Tlaquepaque, Jalisco, Mexico 45601
Phone: 011-52-33-3-133-9880
Fax: 011-52-33-3-133-9861
email: info-mx@hellermanntyton.com
ISO 9001 certified

Warranty Policy – HellermannTyton products are warranted to be free from defects in material and workmanship at the time sold by us; but our obligation under this warranty and that of the seller is limited to the replacement of the product, and neither we nor the seller are bound by any other warranty, expressed, implied or statutory. Under no circumstances are we or the seller liable for any loss, damage, expenses or consequential damages of any kind arising out of the use or inability to use these products. All are sold with the understanding that the user will test them in actual use and determine their adaptability for the intended uses.

© HellermannTyton Corporation

HellermannTyton

HellermannTyton North American Corporate Headquarters
7930 N. Faulkner Rd, PO Box 245017
Milwaukee, WI 53224-9517
Phone: (414) 355-1130, (800) 537-1512
Fax: (414) 355-7341, (800) 848-9866
email: corp@htamericas.com
www.hellermann.tyton.com
IATF 16949, AS9100, ISO 9001 and ISO14001 certified

HellermannTyton Canada
Unit #4, 205 Industrial Parkway North
Aurora, Ontario L4G 4C4 Canada
Phone: (800) 661-2461
Fax: (800) 390-3904
email: sales@hellermanntyton.ca

HellermannTyton Mexico
Anillo Periferico Sur 7980 Edificio 6A
Parque Industrial Tecnologico II
Santa María Tequepexpan
Tlaquepaque, Jalisco, Mexico 45601
Phone: 011-52-33-3-133-9880
Fax: 011-52-33-3-133-9861
email: info-mx@hellermanntyton.com
ISO 9001 certified

Warranty Policy – HellermannTyton products are warranted to be free from defects in material and workmanship at the time sold by us; but our obligation under this warranty and that of the seller is limited to the replacement of the product, and neither we nor the seller are bound by any other warranty, expressed, implied or statutory. Under no circumstances are we or the seller liable for any loss, damage, expenses or consequential damages of any kind arising out of the use or inability to use these products. All are sold with the understanding that the user will test them in actual use and determine their adaptability for the intended uses.

© HellermannTyton Corporation

HellermannTyton

Freetext 01

Freetext 02