PROLINE-DD DISCONNECT ENCLOSURE, TYPE 12



INDUSTRY STANDARDS

UL 508A Listed; Type 12; File Number E61997
cUL Listed per CSA C22.2 No. 94; Type 12; File No. E61997

NEMA/EEMAC Type 12
CSA File Number 42186: Type 12
VDE IP55
IEC 60529, IP55

APPLICATION

For a modular disconnect system with application flexibility, choose a ProLine-DD Modular Enclosure. These two-door packages and their components are compatible with any of the standard flange-mounted disconnect switches and mechanisms described in the Preferred Cutout Overview section.

BULLETIN: P20, P20DC, P21

Standard Product

Catalog Number	AxBxC in.	AxBxC mm	Nominal Size (in.)	Nominal Size (mm)	Cutout Provision
PTDDC16124	62.99 x 47.24 x 15.75	1600 x 1200 x 400	62.99 x 47.24 x 15.75	1600 x 1200 x 400	Small
PTDDC16125	62.99 x 47.24 x 19.69	1600 x 1200 x 500	62.99 x 47.24 x 19.69	1600 x 1200 x 500	Small
PTDDC16126	62.99 x 47.24 x 23.62	1600 x 1200 x 600	62.99 x 47.24 x 23.62	1600 x 1200 x 600	Small
PTDDC16164	62.99 x 62.99 x 15.75	1600 x 1600 x 400	62.99 x 62.99 x 15.75	1600 x 1600 x 400	Small
PTDDC16165	62.99 x 62.99 x 19.69	1600 x 1600 x 500	62.99 x 62.99 x 19.69	1600 x 1600 x 500	Small
PTDDC16166	62.99 x 62.99 x 23.62	1600 x 1600 x 600	62.99 x 62.99 x 23.62	1600 x 1600 x 600	Small
PTDDC18164	70.87 x 62.99 x 15.75	1800 x 1600 x 400	70.87 x 62.99 x 15.75	1800 x 1600 x 400	Small
PTDDC18165	62.99 x 62.99 x 19.69	1600 x 1600 x 500	70.87 x 62.99 x 19.69	1800 x 1600 x 500	Small
PTDDC18184	62.99 x 70.87 x 15.75	1600 x 1800 x 400	70.87 x 62.99 x 23.62	1800 x 1800 x 400	Small
PTDDC18185	62.99 x 70.87 x 19.69	1600 x 1800 x 500	70.87 x 70.87 x 19.69	1800 x 1800 x 500	Small
PTDDC18186	62.99 x 70.87 x 23.62	1600 x 1800 x 600	70.87 x 70.87 x 23.62	1800 x 1800 x 600	Small
PTDDC20165	78.74 x 62.99 x 19.69	2000 x 1600 x 500	78.74 x 62.99 x 19.69	2000 x 1600 x 500	Small
PTDDC20166	78.74 x 62.99 x 23.62	2000 x 1600 x 600	78.74 x 62.99 x 23.62	2000 x 1600 x 600	Small
PTDDC20185	78.11 x 71.18 x 19.65	1984 x 1808 x 499	78.74 x 70.87 x 19.69	2000 x 1800 x 500	Small
PTDLDC20185	78.11 x 71.18 x 19.65	1984 x 1808 x 499	78.74 x 70.87 x 19.69	2000 x 1800 x 500	Large
PTDDC20186	78.11 x 71.18 x 23.58	1984 x 1808 x 599	78.74 x 70.87 x 23.62	2000 x 1800 x 600	Small
PTDLDC20186	78.11 x 71.18 x 23.58	1984 x 1808 x 599	78.74 x 70.87 x 23.62	2000 x 1800 x 600	Large
PTDDC22165	86.61 x 62.99 x 19.69	2200 x 1600 x 500	86.61 x 62.99 x 19.69	2200 x 1600 x 500	Small
PTDDC22166	86.61 x 62.99 x 23.62	2200 x 1600 x 600	86.61 x 62.99 x 23.62	2200 x 1600 x 6000	Small

PROLINE-DD Modular Enclosure

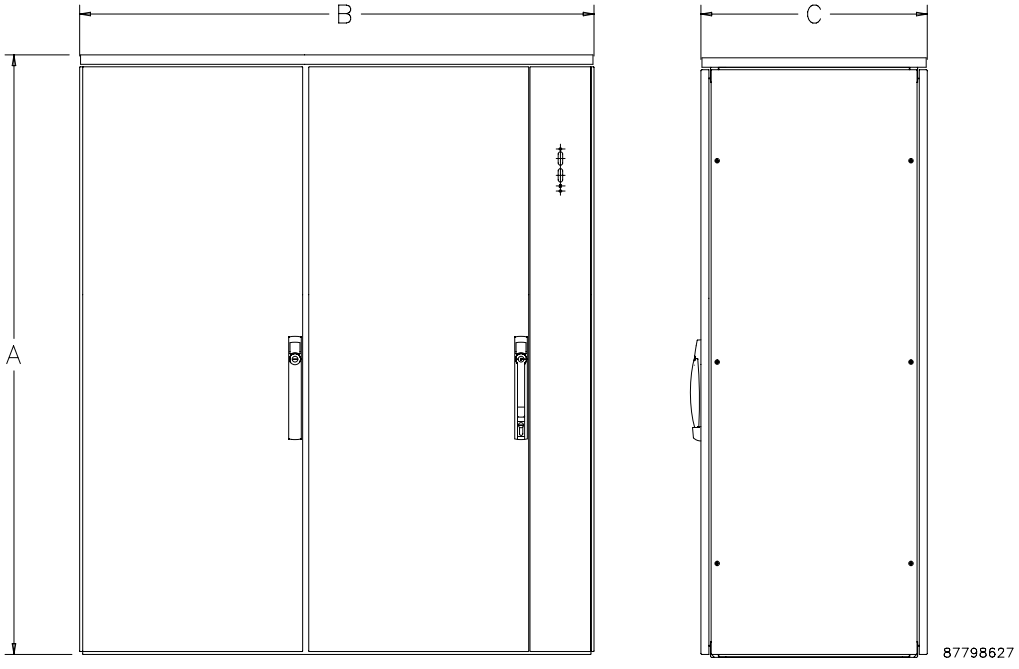

Standard Configuration

- Frame with removable centerpost at front and fixed centerpost at rear
- Solid Top
- Solid Sides
- Left Rear Cover, 2000 x 800mm
- Right Rear Cover, 2000 x 1000mm
- Master Disconnect Door & Mullion
- Slave Door, 2000 x 800mm
- Mechanical Interlock

Optional Components

All optional components may be ordered separately. Components labeled A-T-O may be included in an A-T-O configuration.

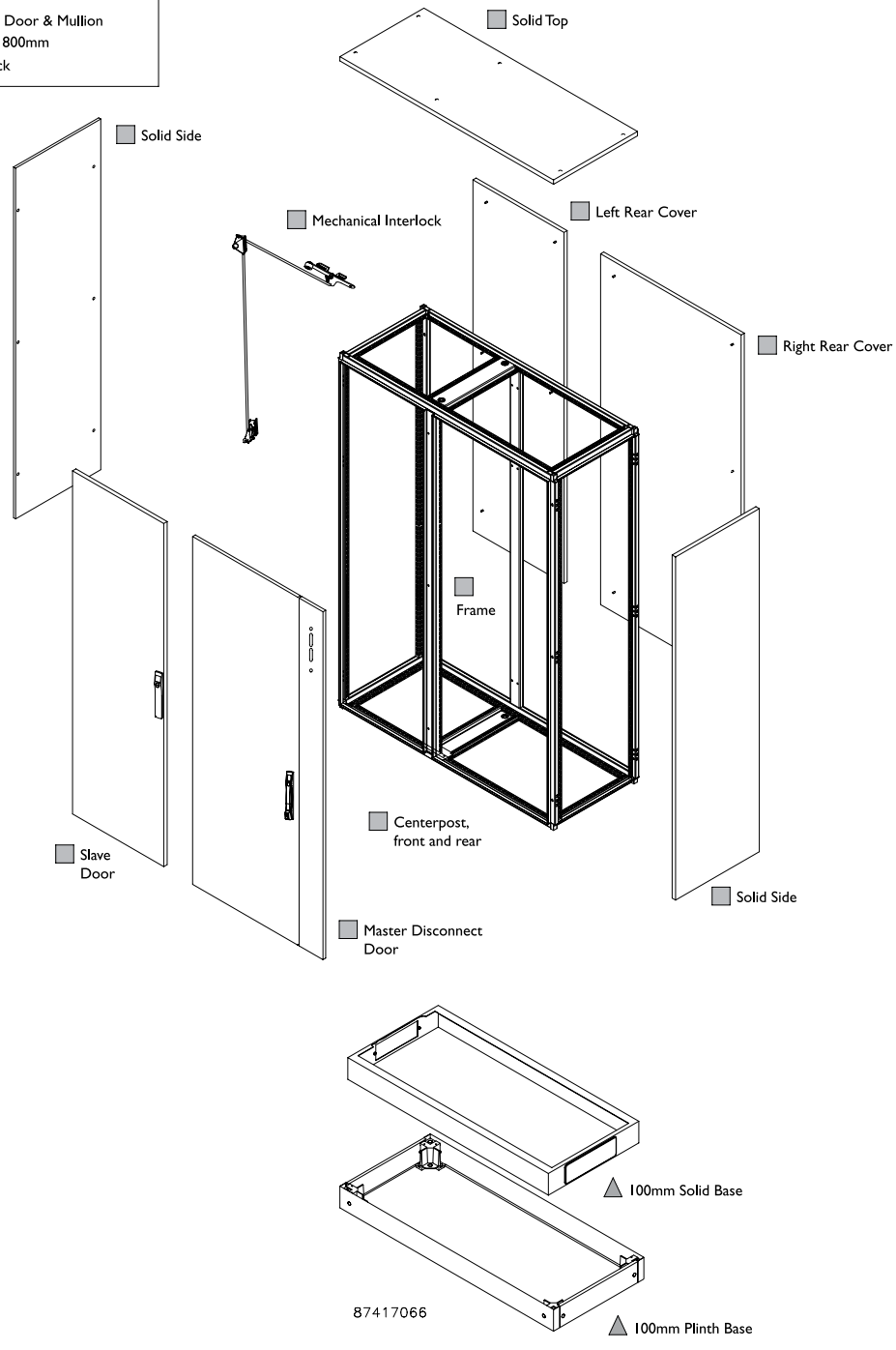

DISCONNECT MOUNTING SPACE

Disconnects will occupy space on panel shown by dimensions E1, F1 and G1. Wiring space W1 is available when disconnect is installed in the enclosure.

See Technical Information for E1 Spacing by Enclosure Height for various disconnect switch manufacturers.

W1 = Wiring Space.

See Technical Information chapter for wire bend space.

Refer to ***NATIONAL ELECTRICAL CODE, 2005*** article 430-10(b) for wiring space required for line side conductors to be connected to disconnect.

Verify your application to determine whether wiring space is adequate.

Consult Space Occupied by Disconnect drawing to determine whether the disconnect device you are using will fit the enclosure size you have selected.

Space Occupied by Disconnect

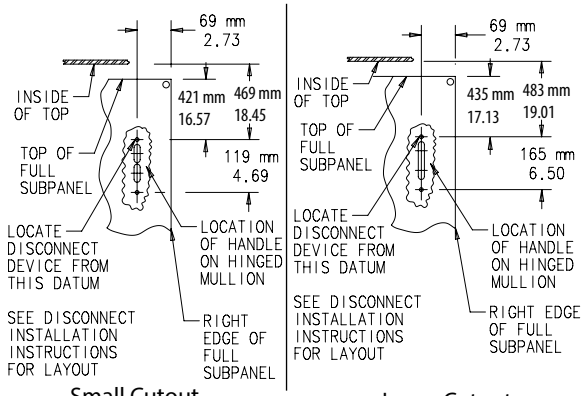

Small Cutout

Large Cutout (PROLINE-DD and Type 1 Free-Stand only)

87417877

PROLINE-DD MODULAR 100-MM BASES

These 100-mm solid and plinth bases mount to ProLine-DD Modular Enclosures. Gland plates are necessary to maintain Type 12 rating when using plinth base.

BULLETIN: P20

Catalog Number	Type	Used with Assembly	D (mm)	D (in.)
PB1185	100-mm Solid Base	PTDDC20185	459	18.07
PB1186	100-mm Solid Base	PTDDC20186	559	22.01
PPB1186	100-mm Plinth Base	PTDDC20186	559	22.01

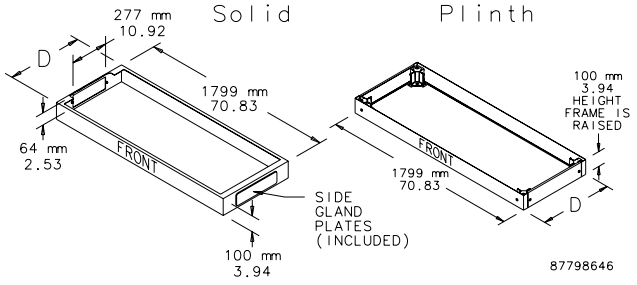

87798646

PROLINE-DD MODULAR SUBPANEL

The Subpanel mounts inside the ProLine-DD Modular Enclosures. It is constructed of 11 gauge steel. Glide blocks are furnished to facilitate handling and installation (hardware is included).

BULLETIN: P20

Subpanel

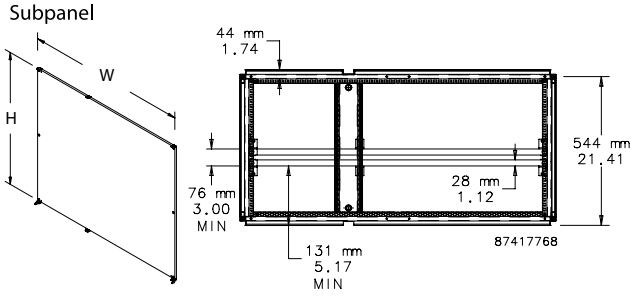

87417768

Catalog Number	Finish	H (in.)	H (mm)	W (in.)	W (mm)	Used with Assembled Enclosures
PPFDD1612	White Paint	58.46	1485	44.49	1130	PTDDC16124, PTDDC16125, PTDDC16126
PPFDD1612G	Conductive	58.46	1485	44.49	1130	PTDDC16124, PTDDC16125, PTDDC16126
PPFDD1616	White Paint	58.46	1485	60.24	1530	PTDDC16164, PTDDC16165, PTDDC16166
PPFDD1616G	Conductive	58.46	1485	60.24	1530	PTDDC16164, PTDDC16165, PTDDC16166
PPFDD1816	White Paint	66.34	1685	60.24	1530	PTDDC18164, PTDDC18165, PTDDC18166
PPFDD1816G	Conductive	66.34	1685	60.24	1530	PTDDC18164, PTDDC18165, PTDDC18166
PPFDD1818	White Paint	66.34	1685	68.11	1730	PTDDC18184, PTDDC18185, PTDDC18186
PPFDD1818G	Conductive	66.34	1685	68.11	1730	PTDDC18184, PTDDC18185, PTDDC18186
PPFDD2016	White Paint	74.21	1885	60.24	1530	PTDDC20165, PTDDC20166
PPFDD2016G	Conductive	74.21	1885	60.24	1530	PTDDC20165, PTDDC20166
PPF2018	White Paint	78.70	2000	70.90	1800	PTDDC20185, PTDDC20186, PTDLD20185, PTDLD20186
PPF2018G	Conductive	78.70	2000	70.90	1800	PTDDC20185, PTDDC20186, PTDLD20185, PTDLD20186
PPFDD2216	White Paint	82.09	2085	60.24	1530	PTDDC22165, PTDDC22166
PPFDD2216G	Conductive	82.09	2085	60.24	1530	PTDDC22165, PTDDC22166

PREFERRED-CUTOUT OVERVIEW



APPLICATION

Enclosures having the preferred cutout are sized for use with up to 200A disconnect switches and up to 400A circuit breakers unless otherwise specified. The preferred cutout accepts the smaller operating handle whose mounting hole centers are 4.688 in. apart. Preferred cutouts are standard in mild steel wall-mount enclosures, modular enclosures and some select large mild steel enclosures. They are also present on all standard stainless steel offerings. 400 A (or greater) disconnect switches and 600 A (or greater) circuit breakers require the "Large" or "High Amp" cutout. This cutout accepts the larger operating handle whose mounting hole centers are 6.500-in. apart. This large cutout is only available on PROLINE-DD Disconnect Packages and Type 1 Free-Stand Enclosures.

Operator adapter for preferred cutouts must be ordered separately to be used with A21S, A28S4, A4S and WS2D enclosures. Preferred cutouts are designed to house the following:

Allen-Bradley

- Bulletin 1494U universal disconnect switches with flange-mount handles for either variable-depth or cable-operated mechanisms
- Bulletin 1494V disconnect switches with flange-mount variable-depth operating mechanisms and Bulletin 1494V flange-mount variable-depth operating mechanisms for circuit breakers
- Bulletin 140U flexible cable operating mechanisms for 140U molded case circuit breakers
- Bulletin 140G flexible cable and variable-depth, flange-mount, molded case circuit breakers
- Bulletin 1494C cable-operated disconnect switches with flange-mount handles
- Bulletin 194RC cable-operated flange-mount handles for use with the NFPA 79 compliant 194R IEC rotary disconnect switches

Allen-Bradley Bulletin 1494V-R1, -R2 and -W2 operating handles and Allen-Bradley Bulletin 1494F disconnect devices or Bulletin 1494D circuit breaker operators will NOT fit these enclosures.

ABB Controls flange-mount variable-depth operating mechanisms for disconnect switches and circuit breakers. Also the cable version for circuit breakers.

Eaton Cutler-Hammer Type C361 flange-mount variable-depth operating mechanisms with disconnect switches and Type C371 flange-mount variable-depth operating mechanisms for circuit breakers.

General Electric Type STDA flange handles and variable-depth operating mechanisms for disconnect switches and circuit breakers. Also SPECTRAFLEX cable operators for circuit breakers.

Siemens ITE MAX FLEX® flange-mount variable-depth operating handles for circuit breakers.

Schneider Square D® Class 9422 disconnect switches with flange-mount variable-depth operating mechanisms or cable mechanisms and Class 9422 flange-mount variable-depth operating mechanisms or cable mechanisms for circuit breakers.
These enclosures will NOT accept Square D Class 9422 bracket-mounted disconnect devices, Class 9422TG1 or TG2 devices.

ORDERING

Order the disconnect switch, operating handle and operating mechanism separately. See Technical Information in the nVent HOFFMAN Specifier's Guide for wire bend space available when various manufacturers' disconnect switches are installed. Check the enclosure dimension drawings to verify the chosen disconnect switch will fit in the enclosure.