SIEMENS

Data sheet 3SE5322-0SB21



safety position switch with guard lock locking force 1300 N 5 approach directions solenoid-locked magnet voltage 24 V DC monitoring actuator 2 NC/1 NO monitoring magnet 2 NC/1 NO matching actuator 3SE5000-0AV0. to be ordered separately

product brand name	SIRIUS
product designation	Mechanical safety switches
design of the product	with separate actuator and with tumbler
product type designation	3SE5
manufacturer's article number of the optional actuators	3SE5000-0AV01 standard actuator, 3SE5000-0AV02 actuator with vertical fixing, 3SE5000-0AV03 actuator with transverse fixing, 3SE5000-0AV04 radius actuator, approach from left, 3SE5000-0AV05 universal actuator, 3SE5000-0AV06 radius actuator, approach from right, 3SE5000-0AV07 Heavy Duty actuator, 3SE5000-0AW42 actuator with vertical fixing, stainless steel socket, 3SE5000-0AW43 actuator with transverse fixing, stainless steel socket, 3SE5000-0AW51 stainless steel actuator, 3SE5000-0AW52 stainless steel actuator with vertical fixing, 3SE5000-0AW53 stainless steel actuator with transverse fixing
suitability for use safety switch	Yes
General technical data	
product function positive opening	Yes
locking force	1 300 N
● according to EN ISO 14119	1 000 N
insulation voltage rated value	250 V
degree of pollution	class 3
surge voltage resistance rated value	4 kV
protection class IP	IP66/IP67
shock resistance	30g / 11 ms
● according to IEC 60068-2-27	30 g / 11 ms
vibration resistance	0.35 mm / 5 g
● according to IEC 60068-2-6	0.35 mm/5 g
mechanical service life (operating cycles) typical	1 000 000
thermal current	10 A
material of the enclosure of the switch head	plastic
reference code according to IEC 81346-2	B
continuous current of the C characteristic MCB	1 A; for a short-circuit current smaller than 400 A
continuous current of the quick DIAZED fuse link	10 A; for a short-circuit current smaller than 400 A
continuous current of the DIAZED fuse link gG	6 A; for a short-circuit current smaller than 400 A
repeat accuracy	0.05 mm
Substance Prohibitance (day/month/year)	10/01/2011
SVHC substance name	Lead CAS-No. 7439-92-1 2-methyl-1-(4-methylthiophenyl)-2-morpholinopropan-1-one CAS-No. 71868-10-5 Melamine CAS-No. 108-78-1 Imidazolidine-2-thione (2-imidazoline-2-thiol) CAS-No. 96-45-7
Net Weight	0.501 kg
minimum actuating force in directions of actuation	30 N
length of the sensor	185 mm

Subject to change without notice
© Copyright Siemens

width of the sensor	54 mm
Ambient conditions	
ambient temperature	
● during operation	-25 ... +60 °C
● during storage	-40 ... +80 °C
explosion protection category for dust	none
consumed active power of magnet coil	3.5 W
operational current at AC-15	
● at 24 V rated value	6 A
● at 120 V rated value	6 A
● at 240 V rated value	3 A
operational current at DC-13	
● at 24 V rated value	3 A
● at 125 V rated value	0.55 A
● at 250 V rated value	0.27 A
Enclosure	
design of the housing	special design
material of the enclosure	plastic
design of the housing according to standard	No
locking mechanism design	magnetic field lock (open-circuit principle)
Drive Head	
design of the actuating element	5 directions of approach
design of the switching function	positive opening
number of directions of actuation	5
circuit principle	slow-action contacts
number of switching contacts safety-related	4
cable entry type	3x (M20 x 1.5)
Installation/ mounting/ dimensions	
mounting position	any
fastening method	screw fixing
Connections/ Terminals	
type of electrical connection	screw terminal
type of connectable conductor cross-sections	
● solid	1x (0.5 ... 1.5 mm²), 2x (0.5 ... 0.75 mm²)
● finely stranded with core end processing	1x (0.5 ... 1.5 mm²), 2x (0.5 ... 0.75 mm²)
● for AWG cables solid	1x (20 ... 16), 2x (20 ... 18)
● for AWG cables stranded	1x (20 ... 16), 2x (20 ... 18)
Supply voltage	
supply voltage of magnet coil	24 V
design of the interface for safety-related communication	without
Communication/ Protocol	
design of the interface	without
Safety related data	
product function suitable for safety function	Yes
service life maximum	20 a
test wear-related service life necessary	Yes
proportion of dangerous failures	
● with low demand rate according to SN 31920	20 %
● with high demand rate according to SN 31920	50 %
B10 value with high demand rate according to SN 31920	1 000 000
failure rate [FIT] with low demand rate according to SN 31920	100 FIT
ISO 13849	
device type according to ISO 13849-1	3
IEC 61508	
safety device type according to IEC 61508-2	A
Approvals Certificates	
General Product Approval	**Test Certificates**

© Copyright Siemens

Type Test Certificates/Test Report

other	Dangerous goods	Environment
Confirmation	Transport Information	Environmental Confirmations

Further information

Information on the packaging
https://support.industry.siemens.com/cs/ww/en/view/109813875
Information for data generation and storage
https://support.industry.siemens.com/cs/ww/en/view/109995012
Information- and Downloadcenter (Catalogs, Brochures,…)
https://www.siemens.com/ic10
Industry Mall (Online ordering system)
https://mall.industry.siemens.com/mall/en/en/Catalog/product?mlfb=3SE5322-0SB21
Cax online generator
https://support.automation.siemens.com/WW/CAXorder/default.aspx?lang=en&mlfb=3SE5322-0SB21
Service&Support (Manuals, Certificates, Characteristics, FAQs,...)
https://support.industry.siemens.com/cs/ww/en/ps/3SE5322-0SB21
Image database (product images, 2D dimension drawings, 3D models, device circuit diagrams, EPLAN macros, ...)
https://www.automation.siemens.com/bilddb/cax_de.aspx?mlfb=3SE5322-0SB21&lang=en

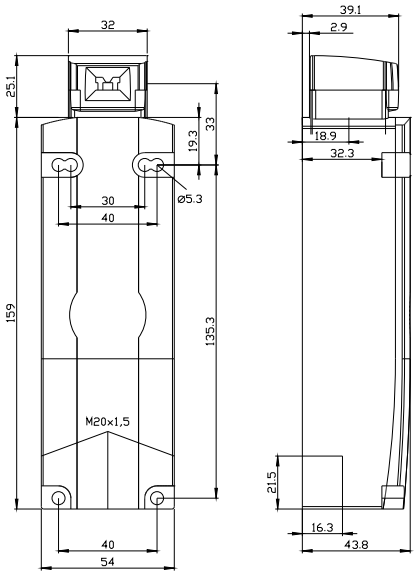

Subject to change without notice
© Copyright Siemens

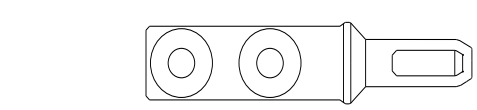

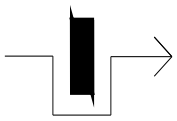

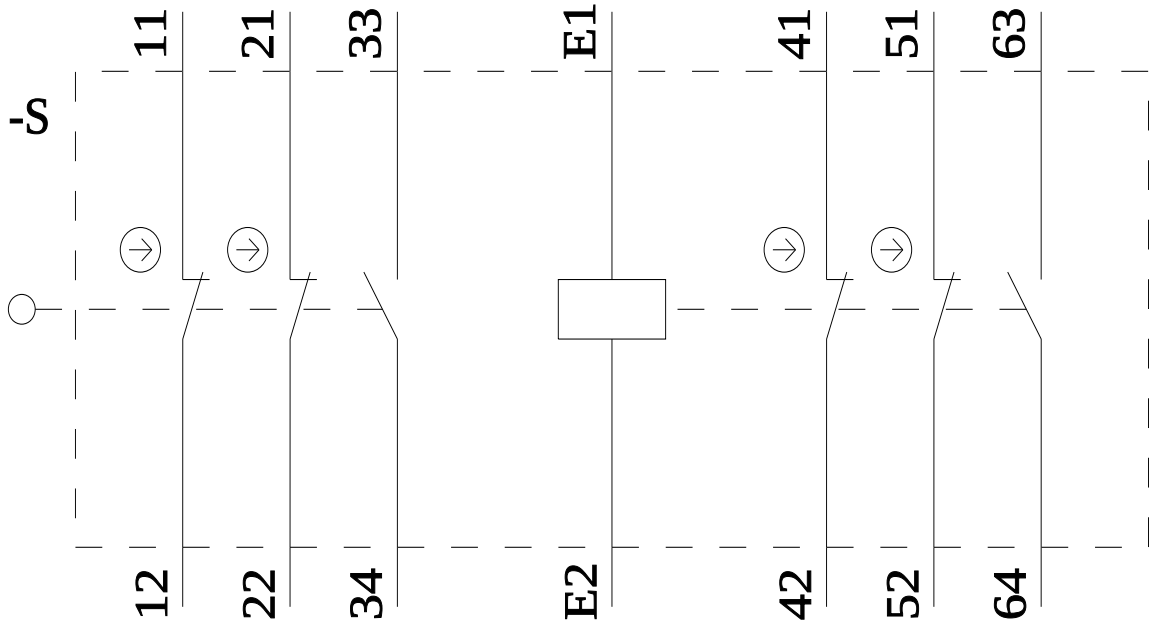

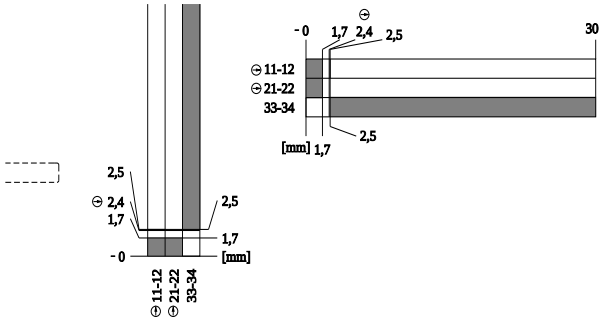

last modified: 4/4/2026

Subject to change without notice
© Copyright Siemens