R34-4



Color: White

Weight: 0.2 lbs

Project:	**Type:**
Prepared By:	**Date:**

Driver Info

Type	Constant Current
120V	0.08A
208V	N/A
240V	N/A
277V	N/A
Input Watts	7.5W

LED Info

Watts	7W
Color Temp	2700K/3000K/3500K/4000K/5000K
Color Accuracy	90 CRI
L70 Lifespan	50,000 Hours
Lumens	700 lm
Efficacy	93

Technical Specifications

Performance

Product Type:
Recessed Retrofit

Description:
Economical recessed retorfit, ideal for applications with more economical needs. Five field adjustable color temperatures to quickly and easily choose from.

Wattage Equivalency:
60W Incandescent

Input Wattage:
7.5W

Lumens:
2700K @ 739lm; 3000K @ 751lm; 3500K @ 754lm; 4000K @ 733lm; 5000K @ 725lm

Efficacy:
2700K @ 99lm/W; 3000K @ 100lm/W; 3500K @ 101lm/W; 4000K @ 98lm/W; 5000K @ 97lm/W

L70 Lifespan:
50,000-Hour LED lifespan based on IES LM-70 results

Electrical

Power Factor:
≥0.7

Dimmable:
Yes, dimmable down to 10% on compatible TRIAC/ELV dimming systems. See Dimmer Compatibility List.

Input Voltage:
120V

Operating Frequency:
60 Hz

Input Current @ 120V (mA):
80mA

Operating Temperature:
-13°C to 104°F (-25°C to 40°C)

Flicker:
≤30%

Driver

Driver:
Constant Current, 60 Hz, 120V, 120V: 0.08A

Optical

Beam Angle:
90°

LED Characteristics

Color Temperature:
Field adjustable via dip switch
2700K/3000K/3500K/4000K/5000K

Color Accuracy (CRI):
>90 CRI

R9 Value:
High color performance with R9 greater than or equal to 50

Color Consistency:
4-step MacAdam Ellipse binning to achieve consistent fixture-to-fixture color

Color Stability:
LED color temperature is warrantied to shift no more than 200K in color temperature over a 5-year period

Color Uniformity:
RAB's range of Correlated Color Temperature follows the guidelines of the American National Standard for Specifications for the Chromaticity of Solid State Lighting (SSL) Products, ANSI C78.377-2017.

Installation

Mounting:
Recessed Housing

Base Type:
E26 Edison

Copyright © 2024 RAB Lighting All Rights Reserved Note: Specifications are subject to change at any time without notice

Technical Specifications (continued)

Construction

Size:
4"

Shape:
Round

Enclosure Material:
Plastic

Trim Style:
Smooth

Lens:
Polycarbonate light diffuser distributes light evenly and smoothly for general lighting applications

Cut Out Template Size:
4 5/16"

Compliance

Listings:
UL Classified

Environment:
Suitable for use in dry, damp, and wet environments.

UV Rated:
Suitable for exposure to direct sunlight

IC Rated:
No

Air Tight:
No

Energy Star Approved:
This product is ENERGY STAR® Version 2.2 Certified.

Energy Star ID:
2669160

Certification Model Number:
DLR0141(R34-4)

T20 Compliant:
Can be used to conform with the requirements of California Title 20

California Title 24 JA8 Compliant:
No

California Energy Commission (CEC) Status:
Lawful for Sales in California

NEC Compliant:
Suitable for use in closets. Compliant with NEC Sec. 410.16 (A)(1) and 410.16 (C3).

IESNA LM-79 & LM-80 Testing:
RAB LED luminaires and LED components have been tested by an independent laboratory in accordance with IESNA LM-79 and LM-80.

RoHS Compliant:
Mercury and UV free. RoHS-compliant components.

FCC:
Complies with Part 15 of the FCC Rules

Other

Accessories:
DLTRIM/R4RS-BN-L
4" Brushed nickel trim round smooth
DLTRIM/R4SB-BRZ-L
4" Bronze trim round smooth
DLTRIM/R4RS-B-L
4" Black trim round smooth
NDCANIC4R
4" New construction housing
RDCANIC4R
4" Retrofit housing
DRI-25-EMGR-DC
Emergency driver 25W
DRI-21-EMGR-DC-D10
Emergency driver 21W 0-10V T20

Warranty:
RAB warrants that our LED products will be free from defects in materials and workmanship for a period of five (5) years from the date of delivery to the end user, including coverage of light output, color stability, driver performance and fixture finish. RAB's warranty is subject to all terms and conditions found at rablighting.com/warranty.

Note:
All values are typical (tolerance +/- 10%)

Buy American Act Compliance:
RAB values USA manufacturing! Upon request, RAB may be able to manufacture this product to be compliant with the Buy American Act (BAA). Please contact customer service to request a quote for the product to be made BAA compliant.

Copyright © 2024 RAB Lighting All Rights Reserved Note: Specifications are subject to change at any time without notice

Dimensions

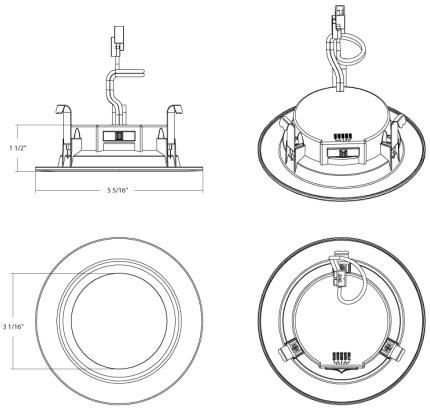

Features

- Use to replace traditional halogen and incandescent light sources
- 5 color temperature selectable 2700/3000/3500/4000/5000K
- Compatible with most standard recessed housings
- E26 Edison base adapter included
- Anti-UV plastic extends the life of the housing

Ordering Matrix

Family	Size (Wattages)	Shape	CRI/Color Temp	Voltage	Finish	Trim
R34	4					
	4 = 4" (7.5W) **6 =** 6" (10W)	**Blank =** Round	**Blank =** 90CRI, 2700K/3000K/3500K/4000K/5000K CCT Adjustable	**Blank =** 120V	**Blank =** White	**Blank =** Smooth **B =** Baffle

Copyright © 2024 RAB Lighting All Rights Reserved Note: Specifications are subject to change at any time without notice