R48B/RGB



Color: White

Weight: 0.2 lbs

Project:	**Type:**
Prepared By:	**Date:**

Driver Info

Type	Constant Current, Class 2
120V	0.07A
208V	N/A
240V	N/A
277V	N/A
Input Watts	8W

LED Info

Watts	8W
Color Temp	RGBW
Color Accuracy	90 CRI
L70 Lifespan	N/A
Lumens	600 lm
Efficacy	75

Technical Specifications

Performance

Product Type:
Retrofit Downlight

Description:
No Gateway or Hub required. These Bluetooth-enabled contractor grade retrofit downlights are tunable white and 16+ million RGB color tuning.

Wattage Equivalency:
65W

Input Wattage:
8W

Lumens:
600lm

Efficacy:
75lm/W

L70 Lifespan:
50,000-Hour LED lifespan based on IES LM-70 results

Lightcloud

Lightcloud Blue:
Lightcloud Blue is a Bluetooth mesh wireless lighting control system that allows you to control RAB's various compatible devices. With RAB's patent-pending Rapid Provisioning technology, devices can be quickly and easily commissioned for residential and large commercial applications using the Lightcloud Blue mobile app. Each device in a system can communicate with any other device, eliminating the need for a Gateway or Hub and maximizing the control system's reach.
DLC system - N1XMLOEATBA
Learn more at www.lightcloud.com

Gateway Required:
No

Communication Protocol:
Bluetooth Mesh

SmartShift:
SmartShift is the most advanced - yet easiest to use - circadian lighting system, which syncs white color tuning with the local sunrise and sunset.

Range:
Up to 60 ft between standard building materials. Building materials such as brick, concrete, and steel construction may require additional Lightcloud Blue devices to extend around an obstruction.
Up to 200 ft clear line of sight (varies by device).

Spacing Criteria:
Lightcloud Blue devices should be placed within the specified range to communicate within the Bluetooth Mesh network.

Copyright © 2024 RAB Lighting All Rights Reserved Note: Specifications are subject to change at any time without notice

Technical Specifications (continued)

Factory Reset:
Method 1: Delete from App (all devices)
Open the app and access the device settings for the paired device. Be sure that the device is online and select 'Delete'. The device will flash on/off 5 times and return to full brightness.

Method 2a: Manual (lamps only)
Power the device off and on 5x consecutively. Do not allow less than 4s to elapse from switching off to on. Do not allow more than 2s to elapse from switching on to off. The device will flash 3x, then reset to 100% brightness at default CCT.

Method 2b Manual: (Remote)
Press and hold "On/Off" button and "Function 1" (..) buttons at the same time for 5 seconds until you see a slow flashing red light at the top left corner on the face of the Remote.

Method 2c Manual: (Nano)
Press and hold the center button on the Nano for 10 seconds. A flashing red light will appear to indicate the Nano has been reset and then revert to a flashing blue light indicating the Nano is ready to pair to the App.

Method 3: Rapid Reset Tool (lamps only)
The Rapid Reset process must be done by a professional electrician qualified by RAB. Reach out to your RAB sales manager to request a Rapid Reset Tool. The tool simply needs to be placed directly on the small Lightcloud Blue logo on the device for 2s or until the lamp/luminaire flashes 3x, then resets to 100% brightness at the default CCT.

Electrical

Driver:
Constant Current, Class 2, 60 Hz, 120V: 0.07A

Power Factor:
≥0.9

Dimmable:
Yes, via the Lightcloud Blue mobile app and devices. This lamp will not operate properly when connected to a standard (incandescent) dimmer or dimming control.

Input Voltage:
120V

Operating Frequency:
60 Hz

Input Current @ 120V (mA):
72mA

Operating Temperature:
-4°F to 104°F (-20°C to 40°C)

Flicker:
≤30%

Optical

Beam Angle:
95°±10°

LED Characteristics

Color Temperature:
Default: 3000K
Adjustable using the Lightcloud Blue mobile app
Tunable White 2200K - 6500K
16+ million RGB colors

Color Accuracy (CRI):
>90 CRI

R9 Value:
High color performance with R9 greater than or equal to 50

Color Consistency:
4-step MacAdam Ellipse binning to achieve consistent fixture-to-fixture color

Color Stability:
LED color temperature is warrantied to shift no more than 200K in color temperature over a 5-year period

Color Uniformity:
RAB's range of Correlated Color Temperature follows the guidelines of the American National Standard for Specifications for the Chromaticity of Solid State Lighting (SSL) Products, ANSI C78.377-2017.

Installation

Mounting:
Recessed Housing

Base:
E26 Edison adapter

Construction

Size:
4"

Shape:
Round

Finish:
White

Enclosure Material:
Metal

Trim Style:
Baffle

Lens:
Polycarbonate light diffuser distributes light evenly and smoothly for general lighting applications

Cut Out Template Size:
4 5/16"

Compliance

Listings:
UL Recognized, UL Classified

Environment:
Suitable for use in dry, damp, and wet environments.

IC Rated:
No

Air Tight:
No

Energy Star Approved:
This product is ENERGY STAR® Version 2.2 Certified.

Energy Star ID:
2684113

DLC Listed:
No

Certification Model Number:
R48B/RGB

T20 Compliant:
Can be used to conform with the requirements of California Title 20

California Title 24 JA8 Compliant:
Can be used to conform with the requirements of California Title 24 Part 6

California Energy Commission (CEC) Status:
Lawful for Sales in California

NEC Compliant:
Suitable for use in closets. Compliant with NEC Sec. 410.16 (A)(1) and 410.16 (C3).

IESNA LM-79 & LM-80 Testing:
RAB LED luminaires and LED components have been tested by an independent laboratory in accordance with IESNA LM-79 and LM-80.

Copyright © 2024 RAB Lighting All Rights Reserved Note: Specifications are subject to change at any time without notice

Technical Specifications (continued)

RoHS:
Mercury and UV free. RoHS-compliant components.

FCC:
Complies with Part 15 of the FCC Rules

Other

Accessories:
RFLED-GOOF-4R-6R-W
4"-6" Goof ring
DLTRIM/R4RB-B
4" Black color trim round baffle
DLTRIM/R4RB-BN
4" Brushed nickel color trim round baffle
DLTRIM/R4RB-BRZ
4" Bronze color trim round baffle

Warranty:
RAB warrants that our LED products will be free from defects in materials and workmanship for a period of five (5) years from the date of delivery to the end user, including coverage of light output, color stability, driver performance and fixture finish. RAB's warranty is subject to all terms and conditions found at rablighting.com/warranty.

Buy American Act Compliance:
RAB values USA manufacturing! Upon request, RAB may be able to manufacture this product to be compliant with the Buy American Act (BAA). Please contact customer service to request a quote for the product to be made BAA compliant.

Dimensions

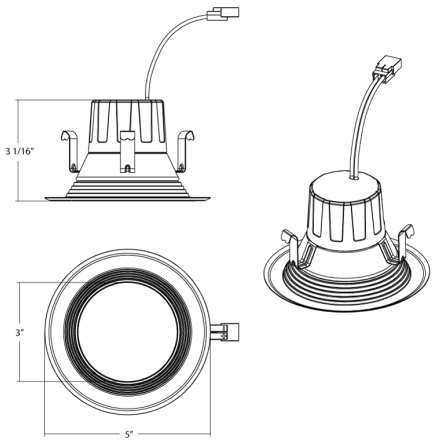

Features

- Direct Connect to the Lightcloud Blue mobile app via Bluetooth, no Gateway or Hub required
- Use mobile device to configure features for On/Off Control, Dim Level, Color Temperature, Schedules, Scenes, SmartShift and more.
- Choose between 16+ million colors to fit any mood
- Tunable White 2200 - 6500K with smooth transition between color temperatures
- Enable SmartShift circadian lighting to get back your body back in sync

Copyright © 2024 RAB Lighting All Rights Reserved Note: Specifications are subject to change at any time without notice

Ordering Matrix

Family	Size	Wattage	CRI/Color Temp	Voltage	Finish	Trim	RGB Color Tuning
R	4	8				B	/RGB
	4 = 4" **6 =** 6"	**8 =** 8W **11 =** 11W	**Blank =** 90 CRI; 2200-6500K	**Blank =** 120V	**Blank =** White	**B =** Baffle	**/RGB =** 16+ million RGB colors

Copyright © 2024 RAB Lighting All Rights Reserved Note: Specifications are subject to change at any time without notice