H17B



Color: Black

Weight: 4.7 lbs

Project:	Type:
Prepared By:	**Date:**

Driver Info

Type	Constant Current
120V	1.40A/1.20A/1.00A
208V	0.80A/0.70A/0.60A
240V	0.70A/0.60A/0.50A
277V	0.60A/0.50A/0.40A
Input Watts	101-149.1W

LED Info

Watts	150/120/100W
Color Temp	3000K/4000K/5000K
Color Accuracy	83-86 CRI
L70 Lifespan	100,000 Hours
Lumens	15,317-22,224 lm
Efficacy	140.1-168.8 lm/W

Technical Specifications

Field Adjustability

Field Adjustable:
Field Adjustable Light Output:
150W/120W/100W (factory default 150W)
Color temperature selectable by 3000K, 4000K and 5000K (factory default 4000K)

Compliance

UL Listed:
Suitable for wet locations

IESNA LM-79 & LM-80 Testing:
RAB LED luminaires and LED components have been tested by an independent laboratory in accordance with IESNA LM-79 and LM-80.

IP Rating:
Ingress protection rating of IP65 for dust and water

Certification Model Number:
H17-002

DLC Listed:
This product is listed by Design Lights Consortium (DLC) as an ultra-efficient premium product that qualifies for the highest tier of rebates from DLC Member Utilities. Designed to meet DLC 5.1 requirements.
DLC Product Code: S-2WSD94

Electrical

Driver:
150W: Constant Current, Class 1, 120-277V, 50/60Hz, 120V: 1.25A, 208V: 0.72A, 240V: 0.63A, 277V: 0.54A
120W: Constant Current, Class 1, 120-277V, 50/60Hz, 120V: 1.00A, 208V: 0.58A, 240V: 0.50A, 277V: 0.43A
100W: Constant Current, Class 1, 120-277V, 50/60Hz, 120V: 0.83A, 208V: 0.48A, 240V: 0.42A, 277V: 0.36A

Dimming Driver:
Driver includes wiring for 0-10V dimming systems. Dim as low as 10%.

THD:
3.25% at 120V, 5.6% at 277V

Power Factor:
99.71% at 120V, 93.05% at 277V

Surge Protection:
L-N: 4kV
L/N-PE: 6kV

LED Characteristics

LEDs:
Long-life, high-efficacy, surface-mount LEDs

Color Consistency:
7-step MacAdam Ellipse binning to achieve consistent fixture-to-fixture color

Color Uniformity:
RAB's range of Correlated Color Temperature follows the guidelines of the American National Standard for Specifications for the Chromaticity of Solid State Lighting (SSL) Products, ANSI C78.377-2017.

Construction

Cold Weather Starting:
The minimum starting temperature is -40°C (-40°F)

Ambient Temperature :
Max Power Temp Rating: 50°C (122°F)
Middle Power Temp Rating: 57°C (135°F)
Low Power Temp Rating: 63°C (145°F)

Housing:
Precision die-cast aluminum

Mounting:
Comes standard with a hanging hook and a 6-foot cord. Heavy-duty 3/4"-14 NPT hook and 3/4"-14 pendant mount capable (pendant by others)

Lens:
Polycarbonate lens

Copyright © 2024 RAB Lighting All Rights Reserved Note: Specifications are subject to change at any time without notice

Technical Specifications (continued)

Reflector:
Polycarbonate and Aluminum (Reflector Accessories Sold Separately)

Finish:
Formulated for high durability and long-lasting color

Green Technology:
Mercury and UV free. RoHS-compliant components.

Other

Compatible Products:
H17 Field-Adjustable High Bay Accessories

5 Yr Limited Warranty:
The RAB 5-year, limited warranty covers light output, driver performance and paint finish. RAB's warranty is subject to all terms and conditions found at rablighting.com/warranty.

Buy American Act Compliance:
RAB values USA manufacturing! Upon request, RAB may be able to manufacture this product to be compliant with the Buy American Act (BAA). Please contact customer service to request a quote for the product to be made BAA compliant.

Performance

Wattage Equivalency:
Equivalent to 400W Metal Halide

Dimensions

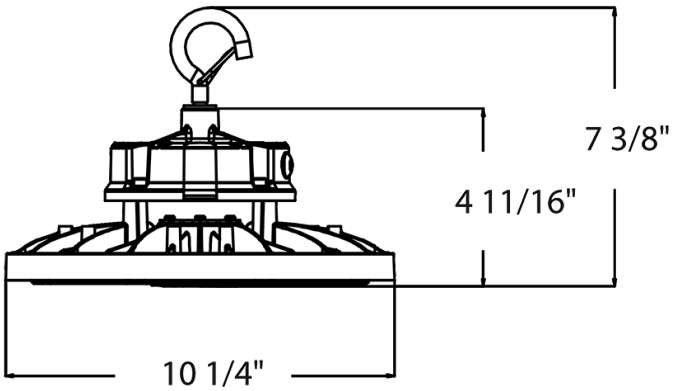

Features

- DLC Premium listed
- 100,000-hour LED Life
- 0-10V dimming standard
- 5-Year, limited warranty

Copyright © 2024 RAB Lighting All Rights Reserved Note: Specifications are subject to change at any time without notice

Ordering Matrix

Family	Wattage	Mounting	Color Temp	Finish	Voltage
H17				B	
	S = 100/80/60W **Blank =** 150/120/100W **XL =** 240/200/150W **XXL =** 500/400/300W	**Blank =** Hook	**Blank =** 3000K/4000K/5000K CCT Adjustable	**Blank =** White **B =** Black	**Blank =** 120-277V, 0-10V Dimming **/480 =** 480V, 0-10V Dimming

Copyright © 2024 RAB Lighting All Rights Reserved Note: Specifications are subject to change at any time without notice