Littelfuse
Expertise Applied | Answers Delivered

KRD3 SERIES



Description

The KRD3 Series measures only 2 in. (50.8 mm) square.Its solid-state timing circuit provides excellent repeat accuracy and stability. Encapsulation protects against shock, vibration, and humidity. The KRD3 Series is a cost effective approach for OEM applications that require small size, isolation, reliability, and long life.

Operation (Recycling Flasher - ON Time First)

Upon application of input voltage, the output energizes and the T1 ON time begins. At the end of the ON time, the output de-energizes and the T2 OFF time begins. At the end of the OFF time, the output energizes and the cycle repeats as long as input voltage is applied.

Reset: Removing input voltage resets the output and time delays, and returns the sequence to T1 ON time.

Wiring Diagram

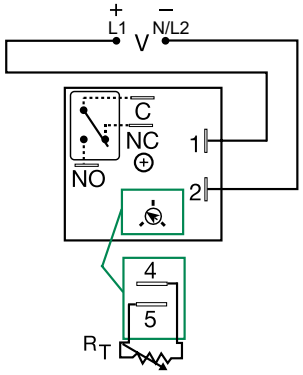

V = Voltage
C = Common, Transfer Contact
NO = Normally Open
NC = Normally Closed

A knob is supplied for adjustable units, or R_T terminals 4 & 5 for external adjust. See external adjustment vs time delay chart.

Relay contacts are isolated.

Features & Benefits

FEATURES	BENEFITS
Compact, low cost design measuring 2 in. (50.8mm) square	Provides greater flexibility for OEM applications and reduces component and labor costs
Microcontroller based	Repeat Accuracy + / -0.5%, Factory calibration + / - 5%
Isolated, 10A, SPDT output contacts	Allows control of loads for AC or DC voltages
Encapsulated	Protects against shock, vibration, and humidity

Ordering Information

MODEL	INPUT VOLTAGE	ADJUSTMENT	TIME DELAY	OPERATING SEQUENCE
KRD3420A	120VAC	Onboard knob	0.1 - 10s	On time first
KRD3421A	120VAC	Onboard knob	1 - 100s	On time first
KRD3434A	120VAC	External	1 - 100m	On time first

If you don't find the part you need, call us for a custom product 800-843-8848

Accessories



P1004-95, P1004-95-X Versa-Pot
Panel mountable, industrial potentiometer recommended for remote time delay adjustment.



P1023-6 Mounting bracket
The 90° orientation of mounting slots makes installation/removal of modules quick and easy.



P0700-7 Versa-Knob
Designed for 0.25 in (6.35 mm) shaft of Versa-Pot. Semi-gloss industrial black finish.



P1015-13 (AWG 10/12), **P1015-64** (AWG 14/16) **Female Quick Connect**
These 0.25 in. (6.35 mm) female terminals are constructed with an insulator barrel to provide strain relief.



P1015-18 Quick Connect to Screw Adapter
Screw adapter terminal designed for use with all modules with 0.25 in. (6.35 mm) male quick connect terminals.



C103PM (AL) DIN Rail
35 mm aluminum DIN rail available in a 36 in. (91.4 cm) length.

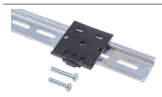

P1023-20 DIN Rail Adapter
Allows module to be mounted on a 35 mm DIN type rail with two #10 screws.

© 2016 Littelfuse Protection Relays & Controls

Littelfuse
Expertise Applied | Answers Delivered

KRD3 SERIES

External Resistance vs. Time Delay

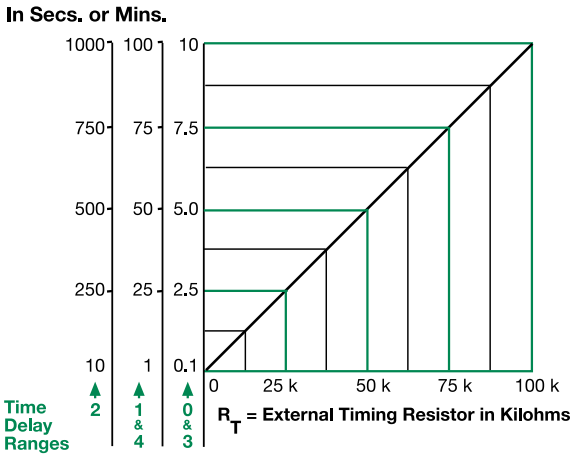

This chart applies to externally adjustable part numbers.
The time delay is adjustable over the time delay range selected by varying the resistance across the RT terminals; as the resistance increases the time delay increases.
When selecting an external RT, add the tolerances of the timer and the RT for the full time range adjustment.
Examples: 1 to 50 S adjustable time delay, select time delay range 1 and a 50 K ohm RT. For 1 to 100 S use a 100 K ohm RT.

Output Current/Ambient Temperature

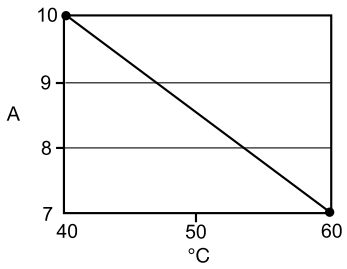

Function Diagram

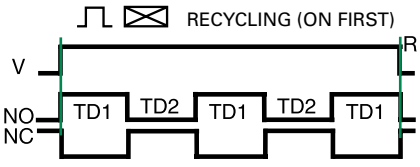

V = Voltage
NO = Normally Open Contact
NC = Normally Closed Contact
TD1, TD2 = Time Delay
R = Reset

Specifications

Time Delay

Range	0.1s - 100m in 5 adjustable ranges or fixed
Repeat Accuracy	±0.5% or 20ms, whichever is greater
Tolerance (Factory Calibration)	≤ ± 5%
Reset Time	≤ 150ms
Time Delay vs Temp. & Voltage	≤ ±5%

Input

Voltage	12, 24 or 110VDC; 24, 120, or 230VAC
Tolerance	
12VDC & 24VDC/AC	-15% - 20%
110VDC, 120 or 230VAC	-20% - 10%
AC Line Frequency/DC Ripple	50/60 Hz / ≤ 10%
Power Consumption	AC ≤ 2VA; DC ≤ 2W

Output

Type	Isolated relay contacts
Form	SPDT
Rating (at 40°C)	10A resistive @ 125VAC; 5A resistive @ 230VAC & 28VDC; 1/4 hp @ 125VAC
Max. Switching Voltage	250VAC
Life (Operations)	Mechanical - 1 x 10^7; Electrical - 1 x 10^5

Protection

Circuitry	Encapsulated
Isolation Voltage	≥ 1500V RMS input to output
Insulation Resistance	≥ 100 MΩ
Polarity	DC units are reverse polarity protected

Mechanical

Mounting	Surface mount with one #10 (M5 x 0.8) screw
Dimensions	**H** 50.8 mm (2"); **W** 50.8 mm (2"); **D** 30.7 mm (1.21")
Termination	0.25 in. (6.35 mm) male quick connect terminals

Environmental

Operating/Storage Temperature	-20° to 60°C / -40° to 85°C
Humidity	95% relative, non-condensing
Weight	≅ 2.6 oz (74 g)

© 2016 Littelfuse Protection Relays & Controls