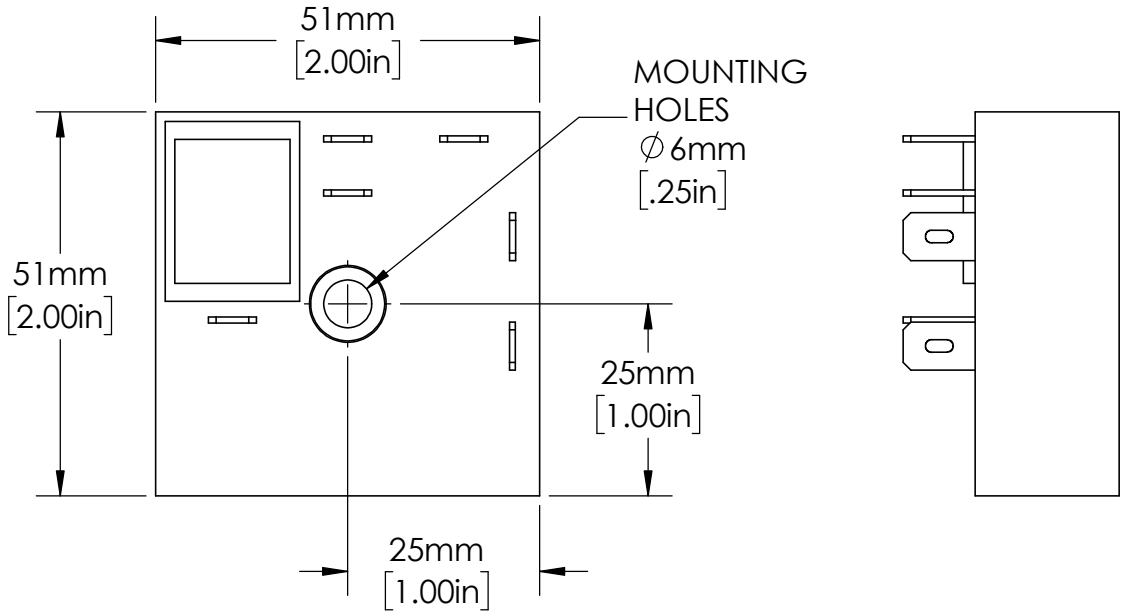

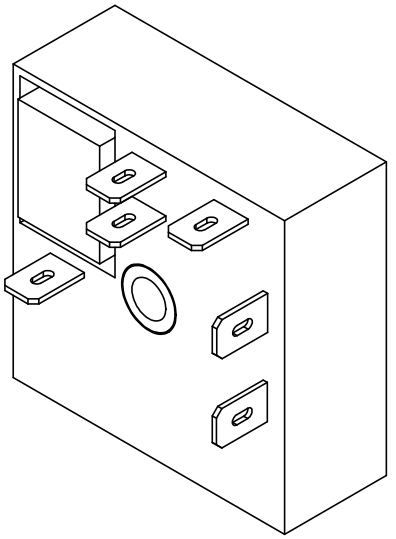

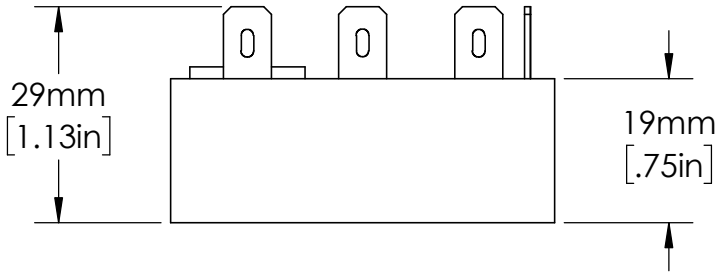

Littelfuse®

UNLESS NOTED OTHERWISE
DIMENSIONS ARE IN INCHES
TOLERANCES:
TWO PLACE DECIMAL ±0.05
NOT DRAWN TO SCALE

DESCRIPTION:
TIME DELAY RELAY

PART NUMBER:
KRDM SERIES

REV
A

MATERIAL

	NAME	DATE
DRAWN BY	J.MOLER	03/17/23

WEIGHT:

SHEET 1 OF 1