SIEMENS

Data sheet 3RM1301-1AA04



Fail-safe reversing starter, 3RM1, 500 V, 0 - 0.12 kW, 0.1 - 0.5 A, 24 V DC, screw terminals

product brand name	SIRIUS
product category	Motor starter
product designation	Failsafe reversing starters
design of the product	With electronic overload protection and safety-related disconnection
product type designation	3RM1
General technical data	
equipment version according to IEC 60947-4-2	3
product function	fail-safe reversing starter
● intrinsic device protection	Yes
● for power supply reverse polarity protection	Yes
suitability for operation device connector 3ZY12	Yes
power loss [W] for rated value of the current	
● at AC in hot operating state per pole	0.01 W
● without load current share typical	1.37 W
insulation voltage rated value	500 V
overvoltage category	III
surge voltage resistance rated value	6 kV
maximum permissible voltage for protective separation	
● between main and auxiliary circuit	500 V
● between control and auxiliary circuit	250 V
shock resistance	6 g / 11 ms
vibration resistance	1 ... 6 Hz, 15 mm; 20 m/s², 500 Hz
operating frequency maximum	1 1/s
reference code according to IEC 81346-2	Q
Substance Prohibitance (day/month/year)	03/01/2017
SVHC substance name	Lead CAS-No. 7439-92-1 Lead monoxide (lead oxide) CAS-No. 1317-36-8 2-methyl-1-(4-methylthiophenyl)-2-morpholinopropan-1-one CAS-No. 71868-10-5 Melamine CAS-No. 108-78-1 6,6'-di-tert-butyl-2,2'-methylenedi-p-cresol CAS-No. 119-47-1
Net Weight	0.314 kg
product function	
● direct start	No
● reverse starting	Yes
product function short circuit protection	No
Electromagnetic compatibility	
EMC emitted interference according to IEC 60947-1	class A
EMC immunity according to IEC 60947-1	Class A
conducted interference	

Subject to change without notice
© Copyright Siemens

● due to burst according to IEC 61000-4-4	3 kV / 5 kHz
● due to conductor-earth surge according to IEC 61000-4-5	4 kV signal lines 2 kV
● due to conductor-conductor surge according to IEC 61000-4-5	2 kV
● due to high-frequency radiation according to IEC 61000-4-6	10 V
field-based interference according to IEC 61000-4-3	10 V/m
electrostatic discharge according to IEC 61000-4-2	6 kV contact discharge / 8 kV air discharge
conducted HF interference emissions according to CISPR11	Class B for the domestic, business and commercial environments
field-bound HF interference emission according to CISPR11	Class B for the domestic, business and commercial environments
Safety related data	
product function suitable for safety function	Yes
suitability for use	
● safety-related switching on	No
● safety-related switching OFF	Yes
safe state	Load circuit open
test wear-related service life necessary	Yes
function test interval maximum	1 a
diagnostics test interval by internal test function maximum	600 s
stop category according to IEC 60204-1	0
proportion of dangerous failures	
● with low demand rate according to SN 31920	0.6 %
● with high demand rate according to SN 31920	40 %
B10 value with high demand rate according to SN 31920	1 000 000
failure rate [FIT] with low demand rate according to SN 31920	16 FIT
IEC 62061	
Safety Integrity Level (SIL) according to IEC 62061	SIL 3
ISO 13849	
category according to EN ISO 13849-1	4
performance level (PL) according to ISO 13849-1	PL e
category according to ISO 13849-1	4
device type according to ISO 13849-1	1
overdimensioning according to ISO 13849-2 necessary	No
IEC 61508	
Safety Integrity Level (SIL)	
● according to IEC 61508	3
safety device type according to IEC 61508-2	Type B
PFHD with high demand rate according to IEC 61508	2E-8 1/h
PFDavg with low demand rate according to IEC 61508	1.75E-5
Safe failure fraction (SFF)	99.4 %
hardware fault tolerance according to IEC 61508	1
T1 value for proof test interval or service life according to IEC 61508	20 a
Electrical Safety	
protection class IP on the front according to IEC 60529	IP20
touch protection on the front according to IEC 60529	finger-safe
ATEX	
Safety Integrity Level (SIL) according to IEC 61508 relating to ATEX	SIL 2
PFHD with high demand rate according to IEC 61508 relating to ATEX	5E-8 1/h
PFDavg with low demand rate according to IEC 61508 relating to ATEX	0.0005
hardware fault tolerance according to IEC 61508 relating to ATEX	0
T1 value for proof test interval or service life according to IEC 61508 relating to ATEX	3 a
certificate of suitability according to ATEX directive 2014/34/EU	BVS 12 ATEX F 002 X
type of protection according to ATEX directive 2014/34/EU	II (2)G [Ex e] [Ex d] [Ex px], II (2)D [Ex t] [Ex p], I (M2) [Ex d]
Main circuit	

Subject to change without notice
© Copyright Siemens

number of poles for main current circuit	3
design of the switching contact	Hybrid
adjustable current response value current of the current-dependent overload release	0.1 ... 0.5 A
minimum load [%]	20 %; from set rated current
type of the motor protection	solid-state
operating voltage rated value	48 ... 500 V
relative symmetrical tolerance of the operating voltage	10 %
operating frequency 1 rated value	50 Hz
operating frequency 2 rated value	60 Hz
relative symmetrical tolerance of the operating frequency	10 %
operational current	
● at AC at 400 V rated value	0.5 A
● at AC-3 at 400 V rated value	0.5 A
● at AC-53a at 400 V at ambient temperature 40 °C rated value	0.5 A
ampacity when starting maximum	4 A
operating power for 3-phase motors at 400 V at 50 Hz	0 ... 0.12 kW
Inputs/ Outputs	
input voltage at digital input at DC rated value	24 V
input current at digital input	
● for signal <1> at DC	8 mA
● with signal <0> at DC	1 mA
number of CO contacts for auxiliary contacts	1
operational current of auxiliary contacts at AC-15 at 230 V maximum	3 A
operational current of auxiliary contacts at DC-13 at 24 V maximum	1 A
Control circuit/ Control	
type of voltage of the control supply voltage	DC
control supply voltage at DC rated value	19.2 ... 30 V
relative negative tolerance of the control supply voltage at DC	20 %
relative positive tolerance of the control supply voltage at DC	25 %
control supply voltage 1 at DC rated value	24 V
operating range factor control supply voltage rated value at DC	
● initial value	0.8
● full-scale value	1.25
control current at DC	
● in standby mode of operation	13 mA
● during operation	57 mA
inrush current peak	
● at 24 V	0.28 A; values at 25 °C
● at DC at 24 V	300 mA
● at DC at 24 V at switching on of motor	140 mA
duration of inrush current peak	
● at 24 V	85 ms
● at DC at 24 V	80 ms
● at DC at 24 V at switching on of motor	80 ms
power loss [W] in auxiliary and control circuit	
● in switching state OFF	
— with bypass circuit	0.35 W
● in switching state ON	
— with bypass circuit	1.37 W
Response times	
ON-delay time	65 ... 76 ms
OFF-delay time	30 ... 43 ms
Power Electronics	
operational current	

Subject to change without notice
© Copyright Siemens

● at 40 °C rated value	0.5 A
● at 50 °C rated value	0.5 A
● at 55 °C rated value	0.5 A
● at 60 °C rated value	0.5 A
Installation/ mounting/ dimensions	
mounting position	vertical, horizontal, standing (observe derating)
fastening method	screw and snap-on mounting onto 35 mm DIN rail
height	100 mm
width	22.5 mm
depth	141.5 mm
required spacing	
● with side-by-side mounting	
— forwards	0 mm
— backwards	0 mm
— upwards	50 mm
— downwards	50 mm
— at the side	0 mm
● for grounded parts	
— forwards	0 mm
— backwards	0 mm
— upwards	50 mm
— at the side	3.5 mm
— downwards	50 mm
Ambient conditions	
installation altitude at height above sea level maximum	4 000 m
ambient temperature	
● during operation	-25 ... +60 °C
● during storage	-40 ... +70 °C
● during transport	-40 ... +70 °C
environmental category during operation according to IEC 60721	3K6 (no ice formation, only occasional condensation), 3C3 (no salt mist), 3S2 (sand must not get into the devices), 3M6
relative humidity during operation	10 ... 95 %
air pressure according to SN 31205	900 ... 1 060 hPa
Communication/ Protocol	
protocol is supported	
● PROFINET IO protocol	No
● PROFIsafe protocol	No
product function bus communication	No
protocol is supported AS-Interface protocol	No
Connections/ Terminals	
type of electrical connection	screw-type terminals for main circuit, screw-type terminals for control circuit
● for main current circuit	screw-type terminals
● for auxiliary and control circuit	screw-type terminals
wire length for motor unshielded maximum	100 m
type of connectable conductor cross-sections for main contacts	
● solid	1x (0,5 ... 4 mm²), 2x (0,5 ... 2,5 mm²)
● finely stranded with core end processing	1x (0,5 ... 4 mm²), 2x (0,5 ... 1,5 mm²)
connectable conductor cross-section for main contacts	
● solid or stranded	0.5 ... 4 mm²
● finely stranded with core end processing	0.5 ... 4 mm²
connectable conductor cross-section for auxiliary contacts	
● solid or stranded	0.5 ... 2.5 mm²
● finely stranded with core end processing	0.5 ... 2.5 mm²
type of connectable conductor cross-sections	
● for auxiliary contacts	
— solid	1x (0,5 ... 2,5 mm²), 2x (1,0 ... 1,5 mm²)
— finely stranded with core end processing	1x (0.5 ... 2.5 mm²), 2x (0.5 ... 1 mm²)
● for AWG cables for auxiliary contacts	1x (20 ... 14), 2x (18 ... 16)
AWG number as coded connectable conductor cross	20 ... 12

Subject to change without notice
© Copyright Siemens

section for main contacts	
AWG number as coded connectable conductor cross section for auxiliary contacts	20 ... 14

UL/CSA ratings

operational current at AC at 480 V according to UL 508	0.5 A

Approvals Certificates

General Product Approval					EMV
CCC	cULus	EAC	CE EG-Konf.	UKCA	KC

EMV	For use in hazard-ous locations	Functional Saftey	Test Certificates	other	
RCM	ATEX	Type Examination Cer-tificate	Type Test Certific-ates/Test Report	Confirmation	产品合格 QC PASS

Railway	Environment
Special Test Certific-ate	Environmental Con-firmations

Further information

Information on the packaging
https://support.industry.siemens.com/cs/ww/en/view/109813875
Information for data generation and storage
https://support.industry.siemens.com/cs/ww/en/view/109995012
Information- and Downloadcenter (Catalogs, Brochures,…)
https://www.siemens.com/ic10
Industry Mall (Online ordering system)
https://mall.industry.siemens.com/mall/en/en/Catalog/product?mlfb=3RM1301-1AA04
Cax online generator
https://support.automation.siemens.com/WW/CAXorder/default.aspx?lang=en&mlfb=3RM1301-1AA04
Service&Support (Manuals, Certificates, Characteristics, FAQs,...)
https://support.industry.siemens.com/cs/ww/en/ps/3RM1301-1AA04
Image database (product images, 2D dimension drawings, 3D models, device circuit diagrams, EPLAN macros, ...)
https://www.automation.siemens.com/bilddb/cax_de.aspx?mlfb=3RM1301-1AA04&lang=en
Characteristic curves
https://curves.simaris.siemens.com/curves/<mmp_prod_noCOMP="HAUPT"></mmp_prod__no>

© Copyright Siemens

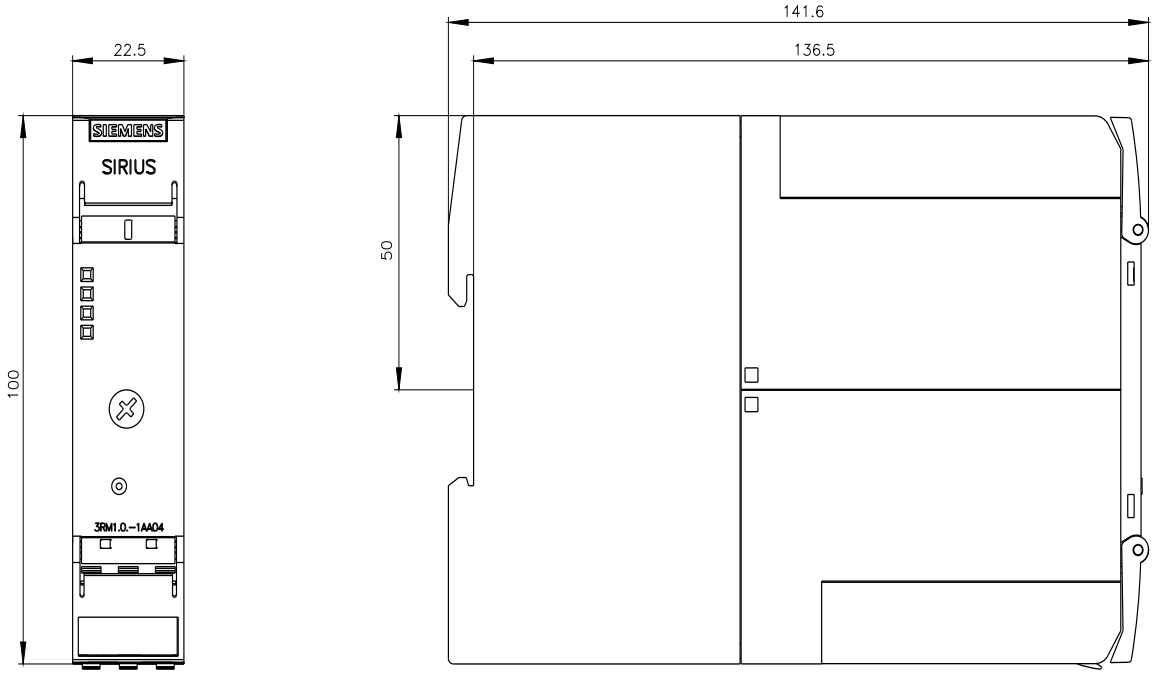

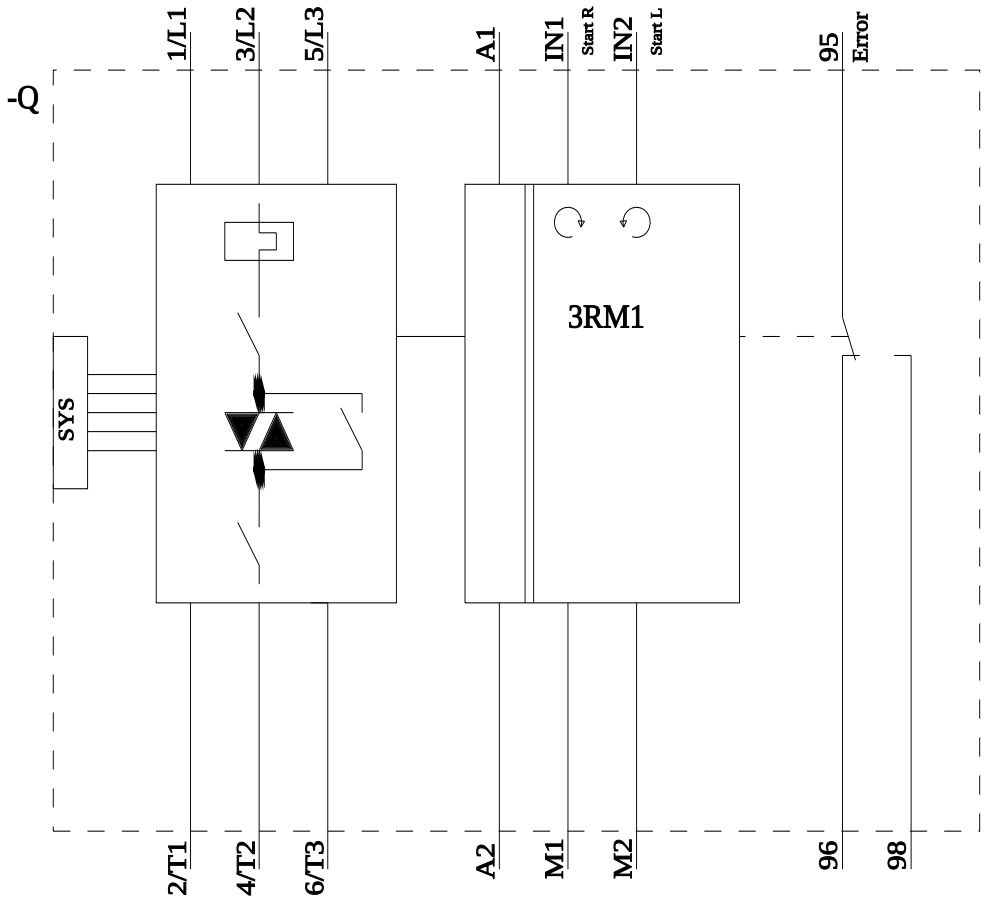

Subject to change without notice
© Copyright Siemens

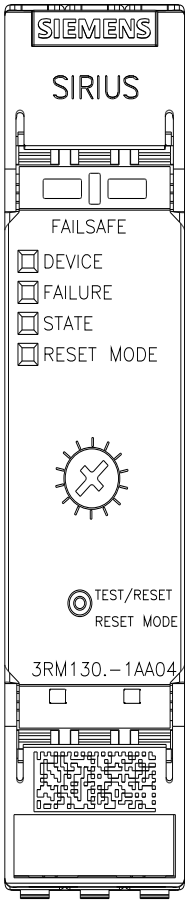

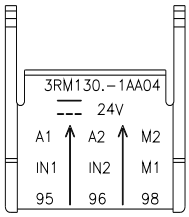

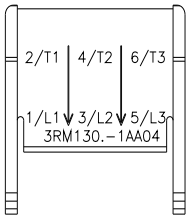

last modified: 4/23/2026

Subject to change without notice
© Copyright Siemens