HATRIM6RD-SW

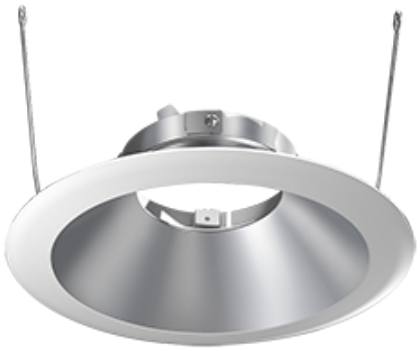

Weight: 0.3 lbs

Project:	**Type:**
Prepared By:	**Date:**

Driver Info

Type	N/A
120V	N/A
208V	N/A
240V	N/A
277V	N/A
Input Watts	0.00W

LED Info

Watts	0W
Color Temp	N/A
Color Accuracy	N/A
L70 Lifespan	N/A Hours
Lumens	N/A
Efficacy	N/A

Technical Specifications

Listings

UL Listed:

Suitable for wet locations in a covered ceiling

Construction

Trim:

6" Round Downlight, Specular Cone, White Trim

Trim Component:

This component must be ordered with HALITE housing and LED light engine in order to make a complete fixture. See here for HALITE housing and LED light engine..

Housing:

Precision die-cast aluminum

Green Technology:

Mercury and UV free. RoHS-compliant components.

Finish:

Formulated for high durability and long-lasting color

Other

Warranty:

RAB warrants that our LED products will be free from defects in materials and workmanship for a period of five (5) years from the date of delivery to the end user, including coverage of light output, color stability, driver performance and fixture finish. RAB's warranty is subject to all terms and conditions found at rablighting.com/warranty.

Buy American Act Compliance:

RAB values USA manufacturing! Upon request, RAB may be able to manufacture this product to be compliant with the Buy American Act (BAA). Please contact customer service to request a quote for the product to be made BAA compliant.

Copyright © 2020 RAB Lighting All Rights Reserved Note: Specifications are subject to change at any time without notice

Dimensions

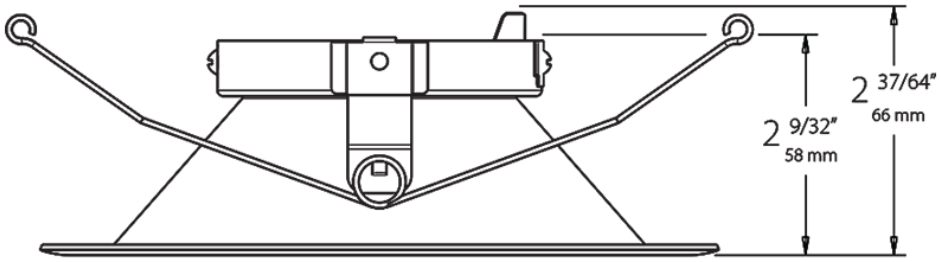

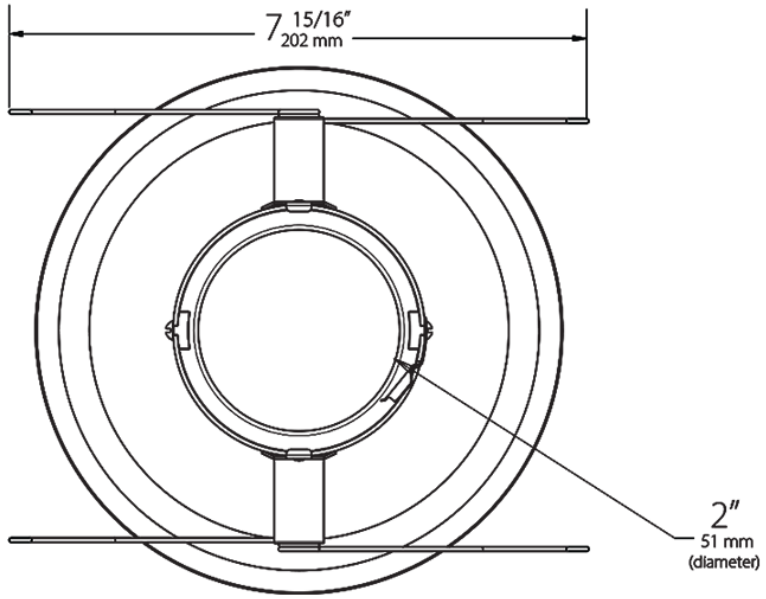

Ordering Matrix

Family	Size	Shape	Type	Finish
HATRIM	6	R		
	4 = 4" **6 =** 6"	**R =** Round **AR =** Adjustable Round **S =** Square	**Blank =** Adjustable Downlight **D =** Downlight **BF =** Downlight Baffle **WW =** Wall Washer	**A =** Antique Bronze **CU =** Copper **SA =** Satin Nickel **W =** White **M =** Semi-Specular **SW =** Specular Cone, White Trim **MW =** Semi-Specular Cone, White Trim **BW =** Black Cone, White Trim **B =** Black

Copyright © 2020 RAB Lighting All Rights Reserved Note: Specifications are subject to change at any time without notice