ALED2T105N



Color: Bronze

Weight: 31.5 lbs

Project:	Type:
Prepared By:	**Date:**

Driver Info

Type	Constant Current
120V	0.89A
208V	0.58A
240V	0.50A
277V	0.44A
Input Watts	106.30W

LED Info

Watts	105W
Color Temp	4000K (Neutral)
Color Accuracy	72 CRI
L70 Lifespan	100,000 Hours
Lumens	12,753
Efficacy	120 lm/W

Technical Specifications

Listings

UL Listed:

Suitable for wet locations

DLC Listed:

This product is listed by Design Lights Consortium (DLC) as an ultra-efficient premium product that qualifies for the highest tier of rebates from DLC Member Utilities. DLC Product Code: PL6HRQC7

IESNA LM-79 & LM-80 Testing:

RAB LED luminaires and LED components have been tested by an independent laboratory in accordance with IESNA LM-79 and LM-80.

Dark Sky Conformance:

Conforms to (allows for conformance to) the IDA's fully shielding requirement, emitting no light above 90 degrees (with the exclusion of incidental light reflecting from fixture housing, mounts, and pole).

Performance

Lifespan:

100,000-Hour LED lifespan based on IES LM-80 results and TM-21 calculations

Construction

IES Classification:

The Type II distribution is ideal for wide walkways, on ramps and entrance roadways, bike paths and other long and narrow lighting applications. This type is meant for lighting larger areas and usually is located near the roadside. This type of lighting is commonly found on smaller side streets or jogging paths.

Effective Projected Area:

EPA = 0.75

Maximum Ambient Temperature:

Suitable for use in up to 40°C (104°F)

Cold Weather Starting:

Minimum starting temperature is -40°C (-40°F)

Thermal Management:

Superior thermal management with external "Air-Flow" fins

Lens:

Tempered glass lens

Housing:

Die-cast aluminum housing, lens frame and mounting arm

Mounting:

Universal mounting arm compatible for hole spacing patterns from 1" to 5 1/2" center to center. Round Pole Adaptor plate included as a standard. Easy slide and lock to mount fixture with ease. Round pole diameter must be >4" to mount fixtures at 90° orientation.

Reflector:

Specular vacuum-metallized polycarbonate

Copyright © 2020 RAB Lighting All Rights Reserved Note: Specifications are subject to change at any time without notice

Technical Specifications (continued)

Construction

Gaskets:

High-temperature silicone gaskets

IP Rating:

Ingress Protection rating of IP66 for dust and water

Finish:

Formulated for high durability and long-lasting color

Green Technology:

Mercury and UV free. RoHS-compliant components.

LED Characteristics

LEDs:

Multi-chip, high-output, long-life LEDs

Color Stability:

LED color temperature is warrantied to shift no more than 200K in color temperature over a 5-year period

Color Uniformity:

RAB's range of Correlated Color Temperature follows the guidelines of the American National Standard for Specifications for the Chromaticity of Solid State Lighting (SSL) Products, ANSI C78.377-2017.

Electrical

THD:

5.4% at 120V, 15.4% at 277V

Power Factor:

99.6% at 120V, 94.4% at 277V

Surge Protection:

4kV

Other

Compatibility:

Compatible with Round Poles with a diameter of 2.5" to 6"

Warranty:

RAB warrants that our LED products will be free from defects in materials and workmanship for a period of five (5) years from the date of delivery to the end user, including coverage of light output, color stability, driver performance and fixture finish. RAB's warranty is subject to all terms and conditions found at rablighting.com/warranty.

Equivalency:

Replaces 320W Metal Halide

Buy American Act Compliance:

RAB values USA manufacturing! Upon request, RAB may be able to manufacture this product to be compliant with the Buy American Act (BAA). Please contact customer service to request a quote for the product to be made BAA compliant.

Optical

BUG Rating:

B1 U0 G2

Dimensions

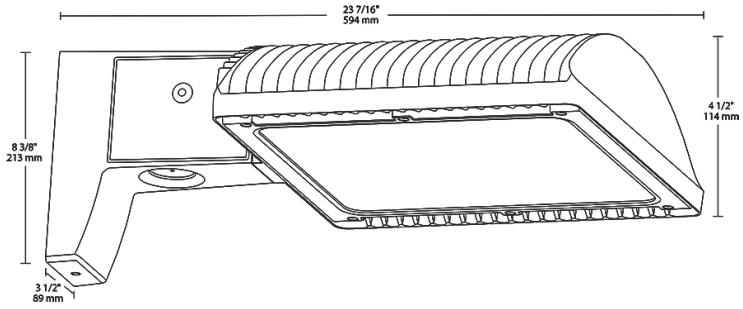

Features

- 66% energy cost savings vs. HID
- 100,000-hour LED lifespan
- 5-Year, No-Compromise Warranty

Copyright © 2020 RAB Lighting All Rights Reserved Note: Specifications are subject to change at any time without notice

ALED2T105N

RAB

Ordering Matrix

Family	Optics	Wattage	Mounting	Color Temp	Finish	Driver Options	Options	Other Options
ALED	2T	105		N				
	4T = Type IV **3T =** Type III **2T =** Type II	**50 =** 50W **78 =** 78W **105 =** 105W **125 =** 125W **150 =** 150W	**Blank =** Pole mount **SF =** Slipfitter	**Blank =** 5000K (Cool) **N =** 4000K (Neutral) **Y =** 3000K (Warm)	**Blank =** Bronze **RG =** Roadway Gray **W =** White **K =** Black	**Blank =** 120-277V **/480 =** 480V **/BL =** Bi-Level **/D10 =** 0-10V Dimming	**Blank =** No Option **/LC =** Lightcloud® Controller **/PCS =** 120V Swivel Photocell **/PCS2 =** 277V Swivel Photocell **/PCT =** 120-277V Twistlock Photocell **/PCS4 =** 480V Swivel Photocell **/PCT4 =** 480V Twistlock Photocell **/WS =** Multi-Level Motion Sensor **/WS2 =** Multi-Level Motion Sensor 20 ft. **/WS4 =** Multi-Level Motion Sensor 40 ft.	**Blank =** Standard **USA =** BAA Compliant

Copyright © 2020 RAB Lighting All Rights Reserved Note: Specifications are subject to change at any time without notice