BR40-12-840-DIM

Project:	Type:	Prepared By:	Date:



UPC: 019813835693

Features and Benefits

- Energy efficient replacement for incandescent and halogen Reflector lamps
- Constructed from durable plastic which lowers risk of breakage
- Rated for use in enclosed and open fixtures in dry or damp locations
- Frosted lens produces smooth diffuse light
- Longer lifespan compared to legacy equivalents minimizes replacement and maintenance costs
- ENERGY STAR Compliant
- Dimmable with common dimmer types (check compatibility list)

Technical Specifications

Performance

Product Type:
Reflector

Input Wattage:
12W

Lumens (Nominal):
1100

Efficacy:
92 lm/W

Color Accuracy:
80

Color Temperature:
4000K

Dimmable:
Yes, down to 10%

L70 Lifespan:
25,000-Hour LED lifespan based on IES LM-70 results

Construction

Bulb Shape:
BR40

Enclosure Material:
Plastic

Housing Finish:
White

Lens Finish:
Frosted

Base Type:
E26

Beam Angle:
110°

Electrical

Power Factor:
>0.7

Input Voltage:
120V

Operating Frequency:
60 Hz

Copyright © 2021 RAB Lighting All Rights Reserved Note: Specifications are subject to change at any time without notice

BR40-12-840-DIM

Technical Specifications (continued)

Electrical

Operating Temperature:

-20°C-45°C

Other

Equivalency:

85

Technology EQ:

Incandescent

Warranty (Years):

3 years

Compliance

UL Listed:

Yes

Environment/Fixture Rating:

Damp / Enclosed

Energy Star ID:

2356244

Rohs:

Mercury and UV free. RoHS-compliant components.

FCC:

Complies with Part 15 of the FCC Rules

Model Number:

R10052(BR40-12-840-DIM)

Minimum Compartment Size

Length x Width x Height [in]	Lamp Quantity
15.83 x 10.71 x 7.24	1

Case and Pallet Dimensions

	QTY	LENGTH (in)	WIDTH (in)	HEIGHT (in)
CASE	6	0	0	0
PALLET	360	0	0	0

Dimension

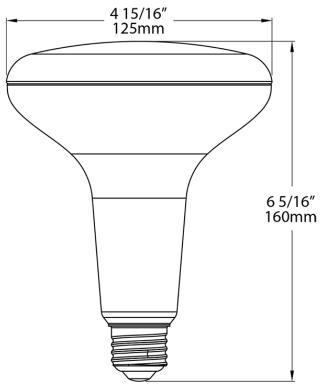

Copyright © 2021 RAB Lighting All Rights Reserved Note: Specifications are subject to change at any time without notice