HAZPLED80F-DG

RAB Outdoor



Pendant Mount HAZLED is a Class I, Division 2 LED fixture designed with 60 years of experience in hazardous location lighting.

Color: Gray

Weight: 15.4 lbs

Project:	Type:
Prepared By:	Date:

Driver Info

Type:	Constant Current
120V:	0.68A
208V:	0.40A
240V:	0.35A
277V:	0.3A
Input Watts:	81W
Efficiency:	98%

LED Info

Watts:	80W
Color Temp:	5000K (Cool)
Color Accuracy:	72 CRI
L70 Lifespan:	100,000
Lumens:	6,056
Efficacy:	74 LPW

Copyright © 2018 RAB Lighting Inc. All Rights Reserved Note: Specifications are subject to change at any time without notice

Technical Specifications

Hazardous Location Classifications

UL 844:

Electric lighting fixtures for use in hazardous (classified) locations

UL 1598:

Electric lighting fixtures for use in non-hazardous locations

UL 8750:

Light Emitting Diode (LED) Light Sources for Use in Lighting Products

Hazardous Location Classifications:

Class I: A hazardous location in which flammable gases or vapors may be present in the air in sufficient quantities to be explosive or ignitable, such as petroleum refineries, aircraft hangars, dry cleaning plants, utility gas plants or storage areas for liquified petroleum or natural gas, and spray finishing areas.

Division 2: Abnormal condition, where igniteable concentrations of flammable gases, vapors or liquids are not like to exist under normal operating conditions, for example:

Closed storage drums containing flammable liquids in an inside storage room would not normall allow the hazardous vapors to escape into the atmosphere. But if one of the containers is leaking, you've got an abnormal condition.

Groups A - D: The gases and vapors of Class 1 locations are broken into four groups by the Code: A,B,C, and D. These materials are grouped according to the ignition temperature of the substance, its explosion pressure, and other flammable characteristics.

Group A - The only substance in group A is acetylene because it is a gas with extremely high explosion pressures.

Group B - This group includes hydrogen and other materials with similar characteristics.

Group C & D - The most usual Class 1 groups. They comprise the greatest percentage of all Class I hazardous locations. Found in Group C is ethylene. Found in Group D are many of the most common flammable substances such as butane, gasoline, natural gas and propane.

Electrical

THD:

4.5% at 120V, 13% at 277V

Power Factor:

99.5% at 120V, 94.3% at 277V

Driver:

Constant Current, Class 2, 100-277V, 50/60 Hz, 2000mA, THD <20%

Optical

BUG Rating:

B2 U3 G2

LED Characteristics

LEDs:

Multi-chip, high-output, long-life LEDs

Lifespan:

100,000-hour LED lifespan based on IES LM-80 results and TM-21 calculations

Color Stability:

LED color temperature is warrantied to shift no more than 200K in CCT over a 5 year period

Color Uniformity:

RAB's range of CCT (Correlated Color Temperature) follows the guidelines of the American National Standard for Specifications for the Chromaticity of Solid State Lighting (SSL) Products, ANSI C78.377-2017.

Construction

Minimum Starting Temperature:

-40°C

IP Rating:

Ingress Protection rating of IP66 for dust and water

Thermal Management:

Superior heat sinking with external Air-Flow fins

Housing:

Die-cast aluminum housing, lens frame and mounting arm

Hardware:

All external hardware is stainless steel

Reflector:

Semi-specular aluminum

Lens/Globes:

Frosted globes

Mounting:

3/4" NPT threaded pendant

Conduit Entry:

3/4"

Gaskets:

Closed cell silicone gasket

Finish:

Our environmentally friendly polyester powder coatings are formulated for high-durability and long-lasting color

Listings

IESNA LM-79 & LM-80 Testing:

RAB LED luminaires and LED components have been tested by an independent laboratory in accordance with IESNA LM-79 and LM-80.

Other

Equivalency:

Equivalent to 150W Metal Halide

Buy American Act Compliance:

RAB values USA manufacturing! Upon request, RAB may be able to manufacture this product to be compliant with the Buy American Act (BAA). Please contact customer service to request a quote for the product to be made BAA compliant.

Copyright © 2018 RAB Lighting Inc. All Rights Reserved Note: Specifications are subject to change at any time without notice

HAZPLED80F-DG

RAB Outdoor

Dimensions

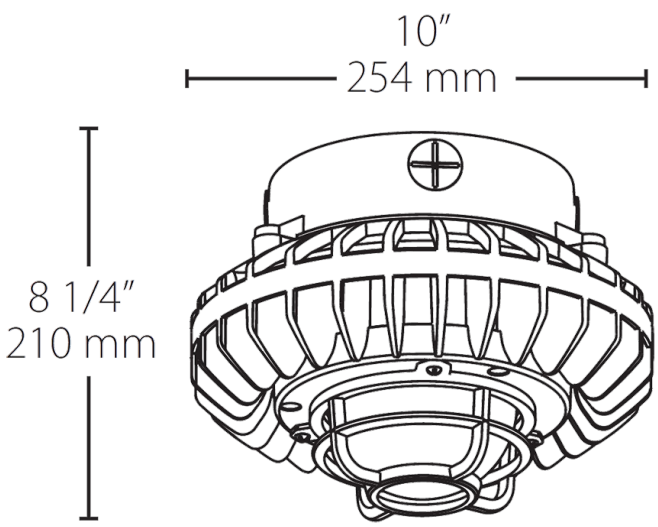

Features

- Class 1, Division 2, Groups A, B, C, D
- IP66, UL1598, UL8750 and UL 844 ratings
- Resistant to shock and vibration
- Rugged construction ensures long-life and safe operation
- 100,000-Hour LED lifespan
- 5-Year, no-compromise warranty

Ordering Matrix

Family	Wattage	Lens/Globes	Guard	Driver Options
HAZPLED	80	F	DG	^
	26 = 26W **42** = 42W **80** = 80W	**CF** = Clear Flat Lens **FF** = Frosted Flat Lens **C** = Clear Globe **F** = Frosted Globe **FR** = Frosted Red Globe **FG** = Frosted Green Globe **FB** = Frosted Blue Globe **FA** = Frosted Amber Globe	**Blank** = No guard **G** = Wire guard **DG** = Die cast guard	**Blank** = On/Off **/D10** = 0-10V Dimming **/480** = 480V On/Off

Copyright © 2018 RAB Lighting Inc. All Rights Reserved Note: Specifications are subject to change at any time without notice