LFLED5YDCB



LED Floodlights for solar applications or other 10-30 VDC systems. Perfect for off-grid, remote-area lighting. Up to 85% more efficient than line voltage AC solutions. Solar panel, battery and controls by others.

Color: Black

Weight: 1.5 lbs

Project:	**Type:**
Prepared By:	**Date:**

Driver Info

Type	DC to DC
120V	N/A
208V	N/A
240V	N/A
277V	N/A
Input Watts	5.10W
Efficiency	98%

LED Info

Watts	5.00W
Color Temp	3000K (Warm)
Color Accuracy	86 CRI
L70 Lifespan	100,000
Lumens	208
Efficacy	40.8 LPW

Technical Specifications

Listings

UL Listed:

Suitable for wet locations. Suitable for ground mounting.

IESNA LM-79 & IESNA LM-80 Testing:

RAB LED luminaires and LED components have been tested by an independent laboratory in accordance with IESNA LM-79 and LM-80.

LED Characteristics

Lifespan:

100,000-hour LED lifespan based on IES LM-80 results and TM-21 calculations

LED:

5 Watt high output, long-life LED

Lumen Maintenance:

100,000 hours Life Based on LM-80 Tests

Color Consistency:

3-step MacAdam Ellipse binning to achieve consistent fixture-to-fixture color

Color Stability:

LED color temperature is warrantied to shift no more than 200K in CCT over a 5-year period

Color Temperature (Nominal CCT):

3000K

Color Uniformity:

RAB's range of CCT (Correlated Color Temperature) follows the guidelines of the American National Standard for (SSL) Products, ANSI C78.377-2017.

Optical

Spot Lens:

Optional spot lens enables a tool-less conversion to an 18° NEMA 3x3 spot. Great for accent lighting or grazing buildings for an artistic touch. Spot reflector kit available here.

NEMA Type:

4H x 4V with 44° beam angle

Construction

Lens:

Microprismatic diffusion lens for smooth and even light distribution

Cold Weather Starting:

Minimum starting temperature is -40°C (-40°F)

Maximum Ambient Temperature:

Suitable for use in 40°C (104°F)

Housing:

Precision die-cast aluminum housing, hood and mounting arm

Gaskets:

High-temperature Silicone

Finish:

Formulated for high durability and long-lasting color

Green Technology:

Mercury and UV free. RoHS-compliant components.

Other

Warranty:

RAB warrants that our LED products will be free from defects in materials and workmanship for a period of five (5) years from the date of delivery to the end user, including coverage of light output, color stability, driver performance and fixture finish. RAB's warranty is subject to all terms and conditions found at rablighting.com/warranty.

Copyright © 2019 RAB Lighting All Rights Reserved Note: Specifications are subject to change at any time without notice

Technical Specifications (continued)

Other

Patents:

The design of the LFLED is protected by Taiwan Patent 01510966 and pending patents in US, Canada, China, and Mexico

Equipment:

Solar panel, battery and controls by others

Buy American Act Compliance:

RAB values USA manufacturing! Upon request, RAB may be able to manufacture this product to be compliant with the Buy American Act (BAA). Please contact customer service to request a quote for the product to be made BAA compliant.

Electrical

Driver:

Constant Current, Class 2, 100-240V, 50-60Hz, 100-240VAC 0.18A.

Dimensions

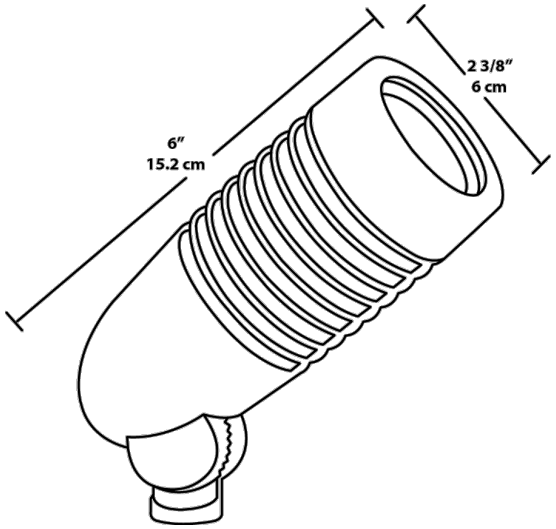

Features

- Low voltage DC
- Ideal for solar applications
- Up to 85% more energy efficient
- No energy-loss from DC-AC inverter
- Enables off-grid, remote-area lighting
- 5-Year, No-Compromise Warranty

Copyright © 2019 RAB Lighting All Rights Reserved Note: Specifications are subject to change at any time without notice