Product data sheet
Characteristics

XCPR2502P20
Limit switch, Limit switches XC Standard, XCPR, steel roller plunger, 1NC+1 NO, slow, M20



Main

Range of product	Telemecanique Limit switches XC Standard
Series name	Standard format
Product or component type	Limit switch
Device short name	XCPR
Sensor design	Compact
Reset	With
Body type	Fixed
Head type	Plunger head
Material	Plastic
Body material	Plastic
Head material	Zamak
Fixing mode	By the body
Movement of operating head	Linear
Type of operator	Spring return roller plunger metal
Type of approach	Lateral approach, 2 directions
Cable entry	1 entry tapped for M20 x 1.5 cable gland 0.28…0.51 in (7…13 mm)
Number of poles	2
Contacts type and composition	1 NC + 1 NO
Contact operation	Slow-break, break before make

Complementary

Switch actuation	By 30° cam
Electrical connection	Screw-clamp terminals, clamping capacity: 1 x 0.5...2 x 2.5 mm²
Contacts insulation form	Zb
Positive opening	With
Positive opening minimum force	36 N
Minimum force for tripping	12 N
Maximum actuation speed	0.5 m/s
Contact code designation	A300, AC-15 (Ue = 240 V), Ie = 3 A 10 A EN/IEC 60947-5-1 appendix A Q300, DC-13 (Ue = 250 V), Ie = 0.27 A EN/IEC 60947-5-1 appendix A
[Ui] rated insulation voltage	300 VUL 508 500 V (pollution degree 3) conforming to EN 60947-1 500 V 3)IEC 60947-1 300 VCSA C22.2 No 14
Maximum resistance across terminals	25 MOhm IEC 60255-7 category 3
[Uimp] rated impulse withstand voltage	6 KV IEC 60664 6 kV IEC 60947-1
Short-circuit protection	10 A cartridge fuse gG
Electrical durability	5000000 Cycles, DC-13, 120 V, 4 W 60 cyc/mn 0.5 IEC 60947-5-1 appendix C 5000000 Cycles, DC-13, 24 V, 10 W 60 cyc/mn 0.5 IEC 60947-5-1 appendix C 5000000 cycles, DC-13, 48 V, 7 W 60 cyc/mn 0.5 IEC 60947-5-1 appendix C
Width	1.22 in (31 mm)
Height	2.56 in (65 mm)
Maximum Depth	1.18 in (30 mm)

The information provided in this documentation contains general descriptions and/or technical characteristics of the performance of the products contained herein.
This documentation is not intended as a substitute for and is not to be used for determining suitability or reliability of these products for specific user applications.
It is the duty of any such user or integrator to perform the appropriate and complete risk analysis, evaluation and testing of the products with respect to the relevant specific application or use thereof.
Neither Schneider Electric Industries SAS nor any of its affiliates or subsidiaries shall be responsible or liable for misuse of the information contained herein.

Net Weight	0.25 lb(US) (0.115 kg)
Terminals description ISO n°1	(21-22)NC (13-14)NO

Environment

Shock resistance	50 gn 11 ms IEC 60068-2-27
Vibration resistance	25 gn 10…500 Hz)IEC 60068-2-6
IP degree of protection	IP66 conforming to IEC 60529 IP67 conforming to IEC 60529
IK degree of protection	IK04 EN 50102
Overvoltage category	Class II IEC 61140 Class II conforming to NF C 20-030
Ambient air temperature for operation	-13…158 °F (-25…70 °C)
Ambient air temperature for storage	-40…158 °F (-40…70 °C)
Protective treatment	TC
Product certifications	CSA UL
Standards	EN 60947-5-1 IEC 60947-5-1 EN 60204-1 CSA C22.2 No 14 UL 508 IEC 60204-1

Ordering and shipping details

Category	22418 - LIMIT SWITCH,IEC,XCKP&XCKT
Discount Schedule	T
GTIN	00785901401117
Nbr. of units in pkg.	1
Package weight(Lbs)	0.2 lb(US) (0.09 kg)
Returnability	No
Country of origin	FR

Packing Units

Unit Type of Package 1	PCE
Package 1 Height	2.13 in (5.4 cm)
Package 1 width	2.36 in (6 cm)
Package 1 Length	7.56 in (19.2 cm)
Unit Type of Package 2	S03
Number of Units in Package 2	40
Package 2 Weight	13.65 lb(US) (6.193 kg)
Package 2 Height	11.81 in (30 cm)
Package 2 width	11.81 in (30 cm)
Package 2 Length	15.75 in (40 cm)

Offer Sustainability

Sustainable offer status	Green Premium product
California proposition 65	WARNING: This product can expose you to chemicals including: Diisononyl phthalate (DINP), which is known to the State of California to cause cancer, and Di-isodecyl phthalate (DIDP), which is known to the State of California to cause birth defects or other reproductive harm. For more information go to www.P65Warnings.ca.gov
REACh Regulation	REACh Declaration
EU RoHS Directive	Pro-active compliance (Product out of EU RoHS legal scope) EU RoHS Declaration
Mercury free	Yes
RoHS exemption information	Yes

Environmental Disclosure	Product Environmental Profile
Circularity Profile	End Of Life Information

Contractual warranty

Warranty	18 months

Dimensions

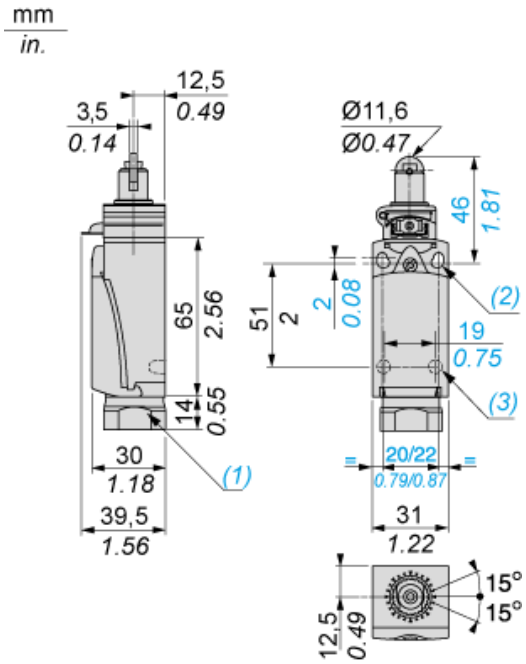

(1) Tapped entry for M20 x 1.5
(2) 2 elongated holes Ø 4.3 x 6.3 mm on 22 mm centres, 2 holes Ø 4.3 on 20 mm centres.
(3) 2 x Ø 3 holes for support studs, depth 4 mm

Mounting with Cable Entry

Position of Cable Gland

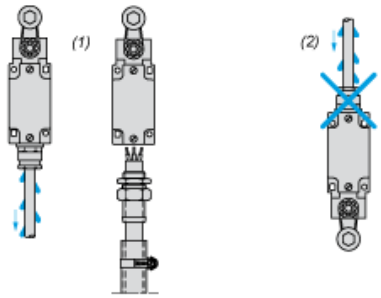

(1) Recommended
(2) To be avoided

Wiring Diagrams

2-pole N/C + N/O Break before Make, Slow Break



Characteristics of Actuation

Switch Actuation by 30° Cam

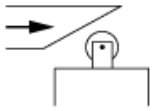

Functionnal Diagram

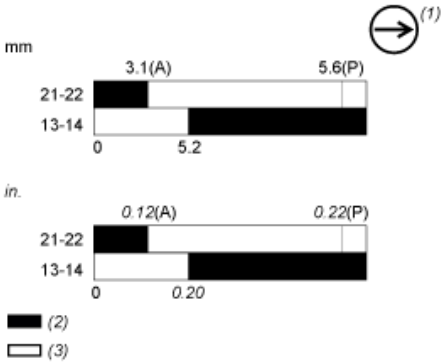

(P) Positive opening point
(A) Cam displacement
(1) NC contact with positive opening operation
(2) Closed
(3) Open