Product data sheet
Characteristics

XY2CEDA296H7
Dual e-stop rope pull switch - 2x(1NC+1NO) - 1/2" NPT - boot. pb - pilot light



Main

Range of product	Telemecanique Emergency stop rope pull switches XY2C
Product or component type	Dual emergency stop rope pull switch
Device short name	XY2CED
Housing colour	Red RAL 3000
Overvoltage category	Class I EN/IEC 61140

Complementary

Local signalling	With pilot light, red, 24...130 V
Number of cables	2
Trigger cable maximum length	2 x 328.08 ft (100 m)
Bellow material	Nitril
Body material	Zamak
Cover material	Stainless steel
Reset	By booted push-button
Contacts type and composition	2 x (1 NC + 1 NO)
Contact operation	Slow-break
Trigger cable anchor point	RH and LH sides
Connections - terminals	Screw clamp terminal, 1 x 0.5...2 x 1.5 mm²
Tightening torque	7.08…10.62 lbf.in (0.8…1.2 N.m)
Cable entry number	3 tapped entry for 1/2" NPT conduit entry
Safety level	Can reach PL = e with the appropriate monitoring system and correctly wired EN/ISO 13849-1 Can reach category 4 with the appropriate monitoring system and correctly wired EN/ISO 13849-1 Can reach SIL 3 with the appropriate monitoring system and correctly wired EN/IEC 61508
Safety reliability data	B10d = 300000 value given for a life time of 20 years limited by mechanical or contact wear IEC 60947-5-5
Marking	CE
Mechanical durability	60000 cycles
Distance between cable supports	9.84…16.40 ft (3…5 m)
[Ie] rated operational current	3 A 240 V, AC-15, A300 EN/IEC 60947-5-1 appendix A 0.27 A 250 V, DC-13, Q300 EN/IEC 60947-5-1 appendix A
[Ithe] conventional enclosed thermal current	10 A
[Ui] rated insulation voltage	500 V 3)EN/IEC 60947-1 300 V conforming to UL 508 300 V conforming to CSA C22.2 No 14
[Uimp] rated impulse withstand voltage	6 kV EN/IEC 60947-1
Positive opening	With conforming to EN/IEC 60947-5-1
Maximum resistance across terminals	25 MOhm conforming to EN/IEC 60255-7 category 3
Short-circuit protection	10 A cartridge fuse gG EN/IEC 60269
Terminals description ISO n°1	(13-14)NO (21-22)NC

The information provided in this documentation contains general descriptions and/or technical characteristics of the performance of the products contained herein.
This documentation is not intended as a substitute for and is not to be used for determining suitability or reliability of these products for specific user applications.
It is the duty of any such user or integrator to perform the appropriate and complete risk analysis, evaluation and testing of the products with respect to the relevant specific application or use thereof.
Neither Schneider Electric Industries SAS nor any of its affiliates or subsidiaries shall be responsible or liable for misuse of the information contained herein.

Net Weight	4.19 lb(US) (1.9 kg)
Compatibility code	XY2CED

Environment

Standards	Machinery directive 2006/42/EC UL 508 EN/IEC 60947-5-5 EN/ISO 13850 Work equipment directive 2009/104/EC CSA C22.2 No 14 EN/IEC 60204-1 EN/IEC 60947-5-1
Product certifications	UL category NISD emergency stop devices CSA CCC EAC
Protective treatment	TC
Ambient air temperature for operation	-13…158 °F (-25…70 °C)
Ambient air temperature for storage	-40…158 °F (-40…70 °C)
Vibration resistance	10 gn 10…300 Hz)EN/IEC 60068-2-6
Shock resistance	50 gn 11 ms conforming to EN/IEC 60068-2-27
IP degree of protection	IP66 IEC 60529

Ordering and shipping details

Category	22441 - LIMIT SWITCHES,CABLE PULL
Discount Schedule	T
GTIN	00785901093909
Nbr. of units in pkg.	1
Package weight(Lbs)	4.42 lb(US) (2.00 kg)
Returnability	No
Country of origin	FR

Packing Units

Unit Type of Package 1	PCE
Package 1 Height	4.02 in (10.2 cm)
Package 1 width	6.26 in (15.9 cm)
Package 1 Length	12.17 in (30.9 cm)
Unit Type of Package 2	S03
Number of Units in Package 2	4
Package 2 Weight	18.88 lb(US) (8.564 kg)
Package 2 Height	11.81 in (30 cm)
Package 2 width	11.81 in (30 cm)
Package 2 Length	15.75 in (40 cm)

Offer Sustainability

Sustainable offer status	Green Premium product
California proposition 65	WARNING: This product can expose you to chemicals including: Diisononyl phthalate (DINP), which is known to the State of California to cause cancer, and Di-isodecyl phthalate (DIDP), which is known to the State of California to cause birth defects or other reproductive harm. For more information go to www.P65Warnings.ca.gov
REACh Regulation	REACh Declaration
EU RoHS Directive	Pro-active compliance (Product out of EU RoHS legal scope) EU RoHS Declaration
Mercury free	Yes
RoHS exemption information	Yes
Environmental Disclosure	Product Environmental Profile

Dimensions

Without Tensioner

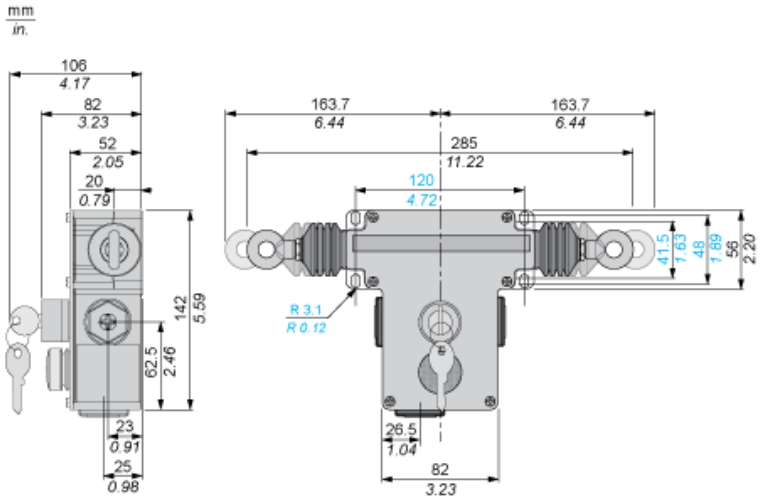

With Tensioners

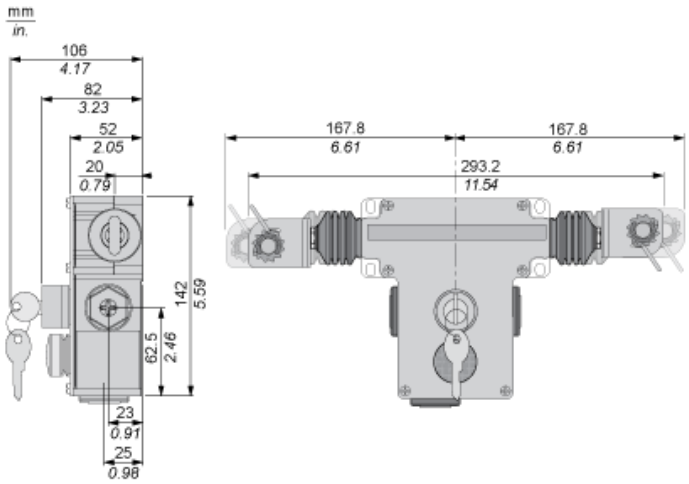

Electrical Curves

AC Supply 50/60 Hz. ⎓ Inductive Circuit

2-pole Contact Block

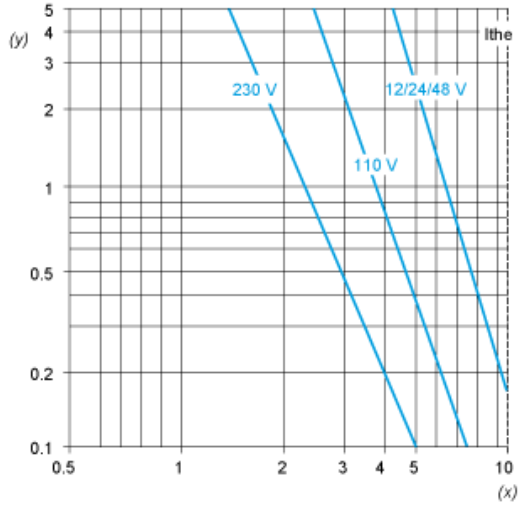

(y) Millions of operating cycles
(x) Current in A

DC Supply. Power Broken in W for 1 Million Operating Cycles. ⎓ Inductive Circuit

Voltage	V	24	48	120
⎓	W	13	9	7

Mounting and Clearance

Adjustment Values (With End Spring)

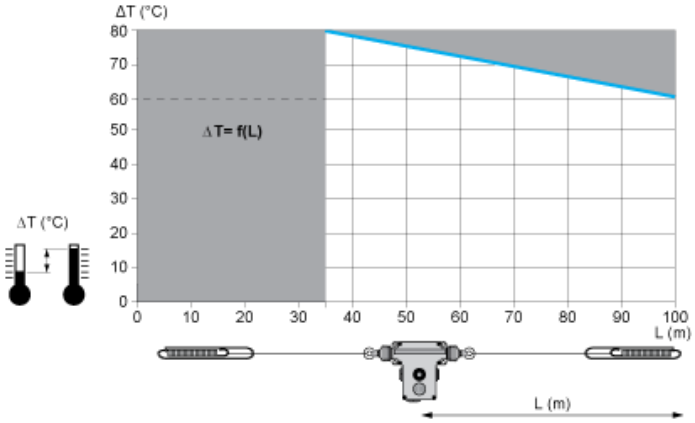

In grey : Prohibited zone