# Product data sheet
## Characteristics

# XCKP2118N12
## limit switch XCKP - thermoplastic roller lever - 1NC+1NO - snap - 1/2NPT



### Main

| | |
|---|---|
| Range of product | OsiSense XC |
| Series name | Standard format |
| Product or component type | Limit switch |
| Device short name | XCKP |
| Sensor design | Compact form A CENELEC EN 50047 |
| Body type | Fixed |
| Head type | Rotary head |
| Material | Plastic |
| Body material | Plastic |
| Head material | Zamak |
| Fixing mode | By the body |
| Movement of operating head | Rotary |
| Type of operator | Spring return roller lever thermoplastic |
| Type of approach | Lateral approach, 2 directions |
| Number of poles | 2 |
| Contacts type and composition | 1 NC + 1 NO |
| Contact operation | Snap action |

### Complementary

| | |
|---|---|
| Tracks | 24/40 mm |
| Switch actuation | By 30° cam |
| Electrical connection | Screw-clamp terminals 1 x 0.34...2 x 1.5 mm² |
| Cable entry | 1 entry tapped for 1/2" NPT cable gland |
| Contacts insulation form | Zb |
| Positive opening | With |
| Positive opening minimum torque | 2.21 lbf.in (0.25 N.m) |
| Minimum torque for tripping | 0.89 lbf.in (0.1 N.m) |
| Maximum actuation speed | 4.92 ft/s (1.5 m/s) |
| Repeat accuracy | 0.1 mm on the tripping points with 1 million operating cycles |
| Contact code designation | A300, AC-15 (Ue = 240 V), Ie = 3 A 10 A EN/IEC 60947-5-1 appendix A<br>Q300, DC-13 (Ue = 250 V), Ie = 0.27 A EN/IEC 60947-5-1 appendix A |
| [Ui] rated insulation voltage | 300 VUL 508<br>500 V 3)IEC 60947-1<br>300 VCSA C22.2 No 14 |
| Maximum resistance across terminals | 25 MOhm IEC 60255-7 category 3 |
| [Uimp] rated impulse withstand voltage | 6 KV IEC 60664<br>6 kV IEC 60947-1 |
| Short-circuit protection | 10 A cartridge fuse gG |
| Electrical durability | 5000000 Cycles, DC-13, 120 V, 4 W 60 cyc/mn 0.5 IEC 60947-5-1 appendix C<br>5000000 Cycles, DC-13, 24 V, 10 W 60 cyc/mn 0.5 IEC 60947-5-1 appendix C<br>5000000 cycles, DC-13, 48 V, 7 W 60 cyc/mn 0.5 IEC 60947-5-1 appendix C |
| Mechanical durability | 10000000 cycles |

The information provided in this documentation contains general descriptions and/or technical characteristics of the performance of the products contained herein.
This documentation is not intended as a substitute for and is not to be used for determining suitability or reliability of these products for specific user applications.
It is the duty of any such user or integrator to perform the appropriate and complete risk analysis, evaluation and testing of the products with respect to the relevant specific application or use thereof.
Neither Schneider Electric Industries SAS nor any of its affiliates or subsidiaries shall be responsible or liable for misuse of the information contained herein.

## Environment

| | |
|---|---|
| Shock resistance | 50 gn 11 ms IEC 60068-2-27 |
| Vibration resistance | 25 gn 10…500 Hz)IEC 60068-2-6 |
| IP degree of protection | IP66 IEC 60529<br>IP67 IEC 60529 |
| IK degree of protection | IK04 EN 50102 |
| Electrical shock protection class | Class II IEC 61140<br>Class II NF C 20-030 |
| Ambient air temperature for operation | -13…158 °F (-25…70 °C) |
| Ambient air temperature for storage | -40…158 °F (-40…70 °C) |
| Protective treatment | TC |
| Product certifications | CSA<br>CCC<br>UL |
| Standards | EN 60204-1<br>IEC 60947-5-1<br>EN 60947-5-1<br>IEC 60204-1<br>CSA C22.2 No 14<br>UL 508 |

## Ordering and shipping details

| | |
|---|---|
| Category | 22418 - LIMIT SWITCH,IEC,XCKP&XCKT |
| Discount Schedule | T |
| GTIN | 00785901300496 |
| Nbr. of units in pkg. | 1 |
| Package weight(Lbs) | 0.31 lb(US) (0.14 kg) |
| Returnability | Yes |
| Country of origin | FR |

## Packing Units

| | |
|---|---|
| Unit Type of Package 1 | PCE |
| Package 1 Height | 3.74 in (9.5 cm) |
| Package 1 width | 1.26 in (3.2 cm) |
| Package 1 Length | 1.50 in (3.8 cm) |

## Offer Sustainability

| | |
|---|---|
| Sustainable offer status | Green Premium product |
| California proposition 65 | WARNING: This product can expose you to chemicals including: Di-isodecyl phthalate (DIDP) and Diisononyl phthalate (DINP) which is known to the State of California to cause Carcinogen and Reproductive harm. For more information go to www.p65warnings.ca.gov |
| EU RoHS Directive | Pro-active compliance (Product out of EU RoHS legal scope) EU RoHS Declaration |
| Mercury free | Yes |
| RoHS exemption information | Yes |
| Environmental Disclosure | Product Environmental Profile |
| Circularity Profile | End Of Life Information |

## Contractual warranty

| | |
|---|---|
| Warranty | 18 months |

## Dimensions

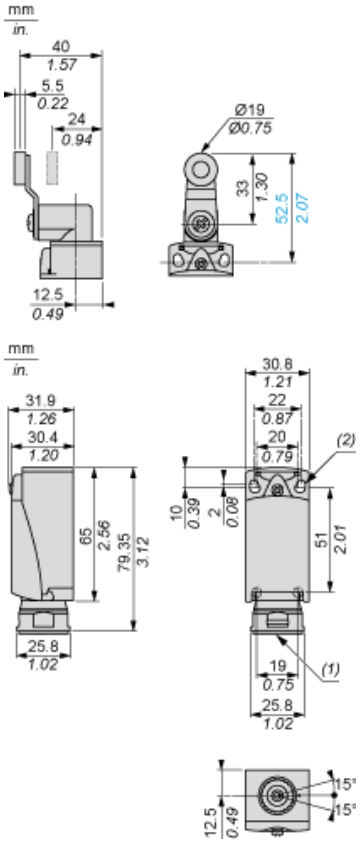


(1) Tapped entry for 1/2" NPT
(2) 2 elongated holes Ø 4.3 x 6.3 mm on 22 mm centres, 2 holes Ø 4.3 on 20 mm centres.

## Mounting with Cable Entry

### Position of Cable Gland

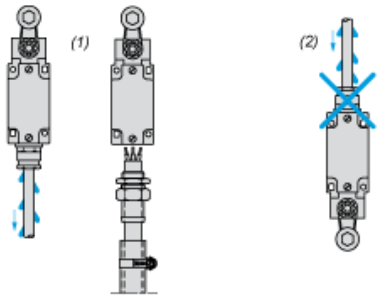


(1) Recommended
(2) To be avoided

## Mounting with Rotary Heads and Levers

### Type of Cam

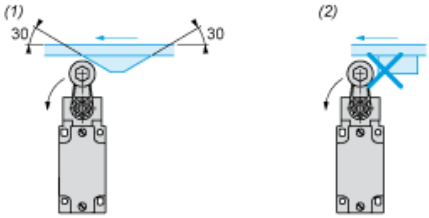


(1) Recommended
(2) To be avoided

## Setting-up with Head ZCE01 and ZCE09

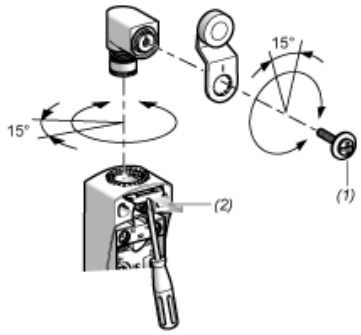


(1) Tightening torque (Min : 1) (Max : 1.5)
(2) Tightening torque (Min : 0.8) (Max : 1.2)

## Wiring Diagram

### 2-pole NC + NO Snap Action



## Characteristics of Actuation

### Switch Actuation by 30° Cam

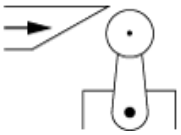

## Functionnal Diagram

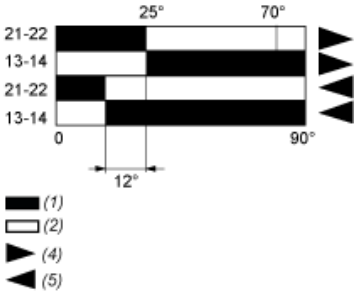


(1) Closed
(2) Open
(4) Tripping
(5) Resetting