Product data sheet
Characteristics

XY2CJS19H29
e-stop rope pull switch XY2CJ - straight - 2NC +1NO - ISO M20

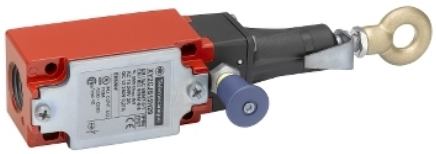

Main

Range of product	Telemecanique Emergency stop rope pull switches XY2C
Product or component type	Latching emergency stop rope pull switch
Device short name	XY2C
Housing colour	Red RAL 3000
Overvoltage category	Class I EN/IEC 61140

Complementary

Local signalling	Color indicator
Number of cables	1
Trigger cable maximum length	65.62 ft (20 m)
Body material	Zamak
Head material	PA (polyamide)
Cover material	Galvanised steel
Reset	By pull button
Contacts type and composition	2 NC + 1 NO
Contact operation	Slow-break
Trigger cable anchor point	RH or LH side
Connections - terminals	Screw clamp terminal, 1 x 0.34...1 x 1 mm² Screw clamp terminal, 1 x 0.34...2 x 0.75 mm²
Tightening torque	7.08…10.62 lbf.in (0.8…1.2 N.m)
Cable entry number	1 tapped entry ISO M20 cable gland
Safety level	Can reach PL = e with the appropriate monitoring system and correctly wired EN/ISO 13849-1 Can reach category 4 with the appropriate monitoring system and correctly wired EN/ISO 13849-1 Can reach SIL 3 with the appropriate monitoring system and correctly wired EN/IEC 61508
Safety reliability data	B10d = 500000 value given for a life time of 20 years limited by mechanical or contact wear IEC 60947-5-5
Marking	CE
Mechanical durability	100000 cycles
Distance between cable supports	16.40 ft (5 m)
[Ie] rated operational current	0.1 A 250 V, DC-13, R300 EN/IEC 60947-5-1 appendix A 1.5 A 240 V, AC-15, B300 EN/IEC 60947-5-1 appendix A
[Ithe] conventional enclosed thermal current	6 A
[Ui] rated insulation voltage	400 V (pollution degree 3) conforming to EN/IEC 60947-1 300 V conforming to UL 508 300 V conforming to CSA C22.2 No 14
[Uimp] rated impulse withstand voltage	4 kV EN/IEC 60947-1
Positive opening	With conforming to EN/IEC 60947-5-1
Maximum resistance across terminals	25 MOhm conforming to EN/IEC 60255-7 category 3 25 MOhm conforming to NF C 93-050 method A
Short-circuit protection	6 A cartridge fuse type gG conforming to EN/IEC 60269

The information provided in this documentation contains general descriptions and/or technical characteristics of the performance of the products contained herein.
This documentation is not intended as a substitute for and is not to be used for determining suitability or reliability of these products for specific user applications.
It is the duty of any such user or integrator to perform the appropriate and complete risk analysis, evaluation and testing of the products with respect to the relevant specific application or use thereof.
Neither Schneider Electric Industries SAS nor any of its affiliates or subsidiaries shall be responsible or liable for misuse of the information contained herein.

Terminals description ISO n°1	(31-32)NC (13-14)NO (21-22)NC
Net Weight	1.00 lb(US) (0.455 kg)
Compatibility code	XY2CJ

Environment

Standards	Work equipment directive 2009/104/EC UL 508 EN/ISO 13850 CSA C22.2 No 14 EN/IEC 60947-5-1 EN/IEC 60204-1 EN/IEC 60947-5-5 Machinery directive 2006/42/EC
Product certifications	UL category NISD emergency stop devices CSA CCC EAC
Protective treatment	TC
Ambient air temperature for operation	-13…158 °F (-25…70 °C)
Ambient air temperature for storage	-40…158 °F (-40…70 °C)
Vibration resistance	10 gn (f= 10…150 Hz) conforming to EN/IEC 60068-2-6
Shock resistance	50 gn 11 ms conforming to EN/IEC 60068-2-27
IP degree of protection	IP66 IEC 60529 IP67 IEC 60529

Ordering and shipping details

Category	22441 - LIMIT SWITCHES,CABLE PULL
Discount Schedule	T
GTIN	03389119619554
Nbr. of units in pkg.	1
Package weight(Lbs)	1.1 lb(US) (0.50 kg)
Returnability	Yes
Country of origin	ID

Packing Units

Package 1 Height	0.560 dm
Package 1 width	0.730 dm
Package 1 Length	2.460 dm

Offer Sustainability

Sustainable offer status	Green Premium product
California proposition 65	WARNING: This product can expose you to chemicals including: Diisononyl phthalate (DINP), which is known to the State of California to cause cancer, and Di-isodecyl phthalate (DIDP), which is known to the State of California to cause birth defects or other reproductive harm. For more information go to www.P65Warnings.ca.gov
REACh Regulation	REACh Declaration
EU RoHS Directive	Pro-active compliance (Product out of EU RoHS legal scope) EU RoHS Declaration
Mercury free	Yes
RoHS exemption information	Yes
Environmental Disclosure	Product Environmental Profile

Dimensions

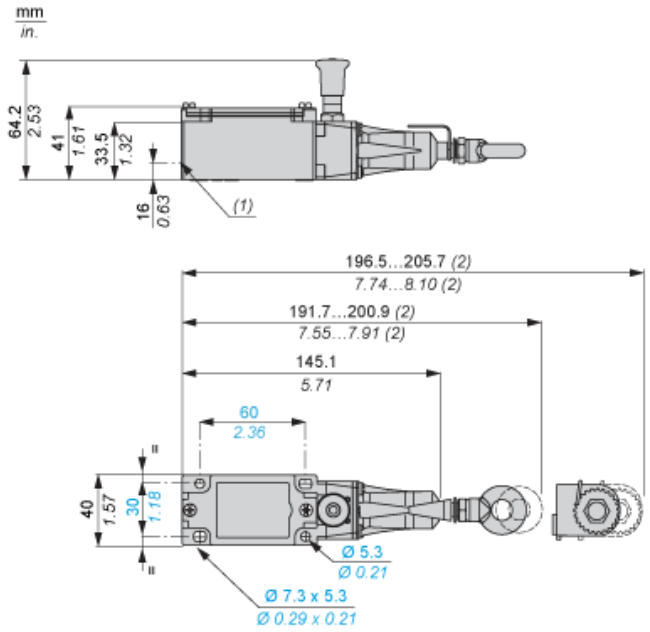

(1) Tapped entry for ISO M20
(2) Maximum extension.

Electrical Curves

AC Supply 50/60 Hz Inductive Circuit

3-pole Contact Block

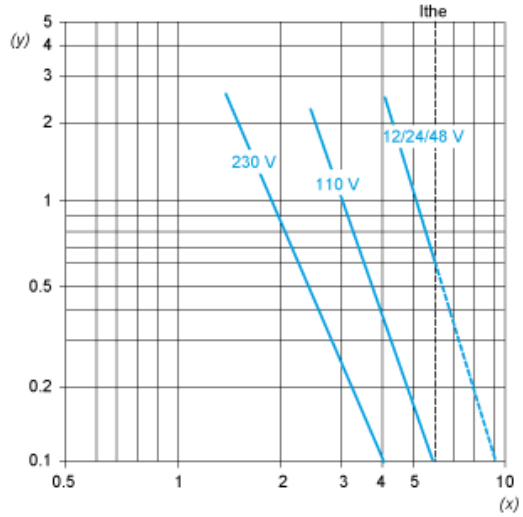

Y Millions of operating cycles
X Current in A

DC Supply Power Broken in for 1 Million Operating Cycles Inductive Circuit

Voltage	V	24	48	120
⎓	W	4	3	2