Product data sheet
Characteristics

XMLCS35R2S11
Electromechanical pressure sensor, Pressure sensors XM, switch XMLC 330 mbar, adjustable scale 2 thresholds, 1 C/O



Main

Range of product	OsiSense XM
Product or component type	Electromechanical pressure sensor
Pressure sensor type	Electromechanical pressure sensor
Device short name	XMLC
Pressure sensor size	5.08 psi (0.35 bar)
Controlled fluid	Air 32…320 °F (0…160 °C)) Hydraulic oil 32…320 °F (0…160 °C))
Fluid connection type	G 1/4 (female) conforming to ISO 228
Electrical connection	Screw-clamps terminals, 1 x 0.5...2 x 2.5 mm²
AWG gauge	AWG 20...AWG 14
Cable entry	Cable gland 0.35…0.51 in (9…13 mm)
Contacts type and composition	2 C/O
Product specific application	30 bar overpressure
Pressure switch type of operation	Regulation between 2 thresholds
Electrical circuit type	Control circuit
Scale type	Adjustable differential
Local display	With
Adjustable range of switching point on rising pressure	0.61…4.79 psi (0.042…0.33 bar)
Adjustable range of switching point on falling pressure	0.03…3.51 psi (0.002…0.242 bar)
Possible differential maximum at high setting	3.34 psi (0.23 bar)
Maximum permissible accidental pressure	543.89 psi (37.5 bar)
Destruction pressure	979.00 psi (67.5 bar)
Pressure actuator	Diaphragm
Materials in contact with fluid	304L stainless steel FPM, FKM Steel
Enclosure material	Zinc alloy
Line Rated Current	3 A, B300, AC-15 (Ue = 120 V)EN/IEC 60947-5-1 1.5 A, B300, AC-15 (Ue = 240 V)EN/IEC 60947-5-1 0.1 A, R300, DC-13 (Ue = 250 V)EN/IEC 60947-5-1

Complementary

Possible differential minimum at low setting	0.58 psi (0.04 bar) +/- 20 mbar)
Possible differential minimum at high setting	1.28 psi (0.088 bar) +/- 20 mbar)
Maximum permissible pressure - per cycle	435.11 psi (30 bar)
Terminal block type	8 terminals
Maximum operating rate	120 cyc/mn
Repeat accuracy	2 %

The information provided in this documentation contains general descriptions and/or technical characteristics of the performance of the products contained herein.
This documentation is not intended as a substitute for and is not to be used for determining suitability or reliability of these products for specific user applications.
It is the duty of any such user or integrator to perform the appropriate and complete risk analysis, evaluation and testing of the products with respect to the relevant specific application or use thereof.
Neither Schneider Electric Industries SAS nor any of its affiliates or subsidiaries shall be responsible or liable for misuse of the information contained herein.

[Ui] rated insulation voltage	300 V UL 508 500 V EN/IEC 60947-1 300 V CSA C22.2 No 14
[Uimp] rated impulse withstand voltage	6 kV EN/IEC 60947-1
Auxiliary contacts operation	Simultaneous, snap action
Contacts material	Silver contacts
Maximum resistance across terminals	25 MOhm IEC 255-7 category 3 25 mOhm NF C 93-050 method A
Short-circuit protection	10 A cartridge fuse gG (gl)
Mechanical durability	2000000 cycles
Setting	External
Height	4.45 in (113 mm)
Maximum Depth	3.35 in (85 mm)
Width	1.81 in (46 mm)
Net Weight	7.72 lb(US) (3.5 kg)

Environment

Standards	CE EN/IEC 60947-5-1 CSA C22.2 No 14 UL 508
Product certifications	EAC UL CSA
Protective treatment	TC standard version
Ambient air temperature for operation	-13…158 °F (-25…70 °C)
Ambient air temperature for storage	-40…158 °F (-40…70 °C)
Operating position	Any position
Vibration resistance	4 gn 30…500 Hz)IEC 60068-2-6
Shock resistance	50 gn IEC 60068-2-27
Electrical shock protection class	Class I IEC 1140 Class I IEC 536 Class I conforming to NF C 20-030
IP degree of protection	IP66 conforming to EN/IEC 60529

Ordering and shipping details

Category	22661 - XMLA,B,C,D PRESSURE SWITCHES
Discount Schedule	DS2
GTIN	03389110472189
Nbr. of units in pkg.	1
Package weight(Lbs)	6.45 lb(US) (2.93 kg)
Returnability	No
Country of origin	CZ

Packing Units

Unit Type of Package 1	PCE
Package 1 Height	6.10 in (15.5 cm)
Package 1 width	6.10 in (15.5 cm)
Package 1 Length	6.30 in (16 cm)
Unit Type of Package 2	CAR
Number of Units in Package 2	1
Package 2 Weight	6.44 lb(US) (2.919 kg)
Package 2 Height	6.11 in (15.52 cm)
Package 2 width	6.02 in (15.3 cm)
Package 2 Length	6.10 in (15.5 cm)
Unit Type of Package 3	P06
Number of Units in Package 3	24
Package 3 Weight	176.37 lb(US) (80 kg)

Package 3 Height	23.62 in (60 cm)
Package 3 width	31.50 in (80 cm)
Package 3 Length	23.62 in (60 cm)

Offer Sustainability

Sustainable offer status	Green Premium product
California proposition 65	WARNING: This product can expose you to chemicals including: Diisononyl phthalate (DINP), which is known to the State of California to cause cancer, and Di-isodecyl phthalate (DIDP), which is known to the State of California to cause birth defects or other reproductive harm. For more information go to www.P65Warnings.ca.gov
REACh Regulation	REACh Declaration
EU RoHS Directive	Pro-active compliance (Product out of EU RoHS legal scope) EU RoHS Declaration
Mercury free	Yes
RoHS exemption information	Yes
Environmental Disclosure	Product Environmental Profile

Contractual warranty

Warranty	18 months

Dimensions

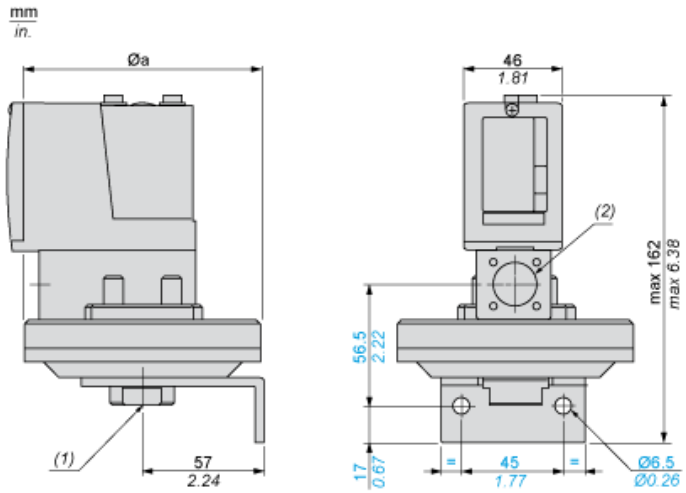

Ø a =110 mm / 4.33 in.
(1) 1 fluid entry, tapped G1/4 (BSP female)
(2) 1 electrical connections entry, tapped Pg 13.5

Wiring Diagram

Terminal Model

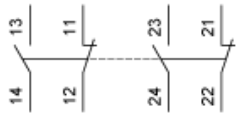

Operating Curves

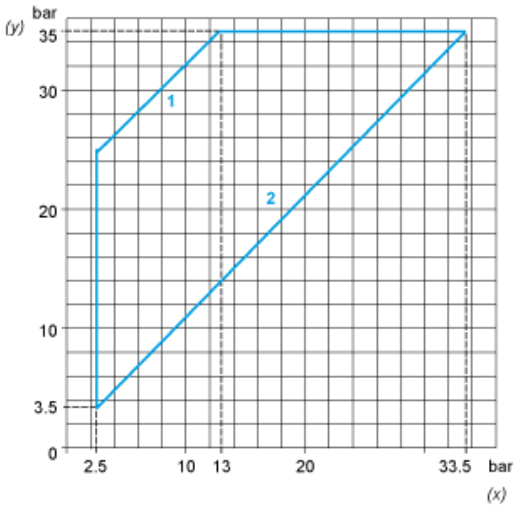

(y) Rising pressure
(x) Falling pressure
1 : Maximum differential
2 : Minimum differential

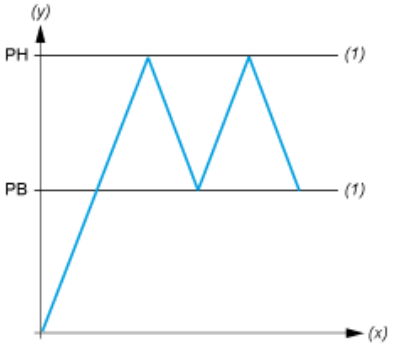

(y) Pressure
(x) Time
(1) Adjustable value
PH : High point
PB : Below point