Product data sheet
Characteristics

XUK0AKSAL2T
Photoelectric sensors XU, photo electric sensor, XUK, emitter, 12...24 VDC, cable 2 m



Main

Range of product	Telemecanique Photoelectric sensors XU
Series name	General purpose multimode
Electronic sensor type	Photo-electric sensor transmitter
Sensor name	XUK
Sensor design	Compact 50 x 50
Detection system	Thru beam
Material	Plastic
Supply circuit type	DC
Wiring technique	3-wire
Electrical connection	Cable
Cable length	6.56 ft (2 m)
Product specific application	-
Emission	Infrared thru beam
[Sn] nominal sensing distance	30 m thru beam need a receiver

Complementary

Enclosure material	PBT
Lens material	PMMA
Maximum sensing distance	35 m thru beam
Add on input	Test by emission breaking
Wire insulation material	PvR
Status LED	1 LED green)supply on
[Us] rated supply voltage	12...24 V DC reverse polarity protection
Supply voltage limits	10…36 V DC
Switching capacity in mA	<= 100 mA overload and short-circuit protection)
Switching frequency	<= 250 Hz
Maximum voltage drop	<1.5 V closed state)
Current consumption	20 mA no-load
Maximum delay first up	300 ms
Maximum delay response	2 ms
Maximum delay recovery	2 ms
Setting-up	Without sensitivity adjustment
Maximum Depth	1.97 in (50 mm)
Height	1.97 in (50 mm)
Width	0.71 in (18 mm)

Environment

Product certifications	CSA UL CE
Ambient air temperature for operation	-13…131 °F (-25…55 °C)
Ambient air temperature for storage	-40…158 °F (-40…70 °C)
Vibration resistance	7 gn +/- 1.5 mm 10…55 Hz) IEC 60068-2-6
Shock resistance	30 gn 11 ms) IEC 60068-2-27
IP degree of protection	IP65 double insulation IEC 60529

The information provided in this documentation contains general descriptions and/or technical characteristics of the performance of the products contained herein.
This documentation is not intended as a substitute for and is not to be used for determining suitability or reliability of these products for specific user applications.
It is the duty of any such user or integrator to perform the appropriate and complete risk analysis, evaluation and testing of the products with respect to the relevant specific application or use thereof.
Neither Schneider Electric Industries SAS nor any of its affiliates or subsidiaries shall be responsible or liable for misuse of the information contained herein.

Ordering and shipping details

Category	22481 - SENSORS, PHOTOELECTRIC
Discount Schedule	DS2
GTIN	00785901510345
Nbr. of units in pkg.	1
Package weight(Lbs)	0.37 lb(US) (0.17 kg)
Returnability	No
Country of origin	ID

Packing Units

Package 1 Height	1.300 dm
Package 1 width	0.950 dm
Package 1 Length	0.420 dm

Offer Sustainability

Sustainable offer status	Green Premium product
California proposition 65	WARNING: This product can expose you to chemicals including: Diisononyl phthalate (DINP), which is known to the State of California to cause cancer, and Di-isodecyl phthalate (DIDP), which is known to the State of California to cause birth defects or other reproductive harm. For more information go to www.P65Warnings.ca.gov
REACh Regulation	REACh Declaration
EU RoHS Directive	Pro-active compliance (Product out of EU RoHS legal scope) EU RoHS Declaration
Mercury free	Yes
RoHS exemption information	Yes
Environmental Disclosure	Product Environmental Profile
Circularity Profile	End Of Life Information

Contractual warranty

Warranty	18 months

XUK0AKSAL2T

Dimensions

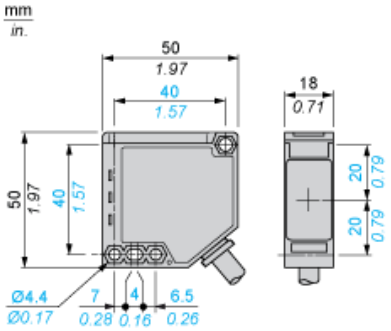

Wiring Schemes

Thru-beam Transmitter DC

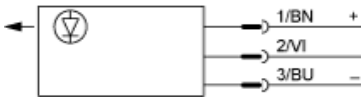

(+) Brown
BN :
(-) Blue
BU :
VI : Violet

Input 2/VI:

- not connected: beam made
- connected to -: beam broken

Detection Curves

With Thru-beam Accessory (Thru-beam)

