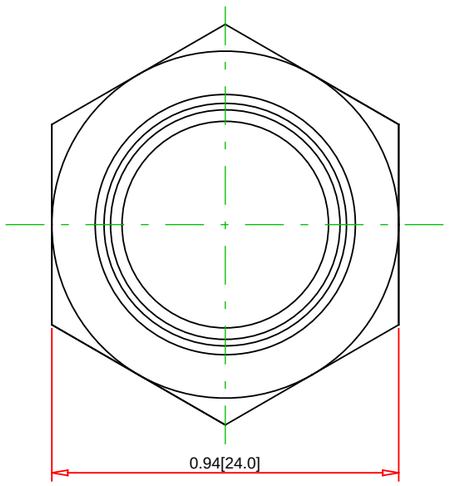

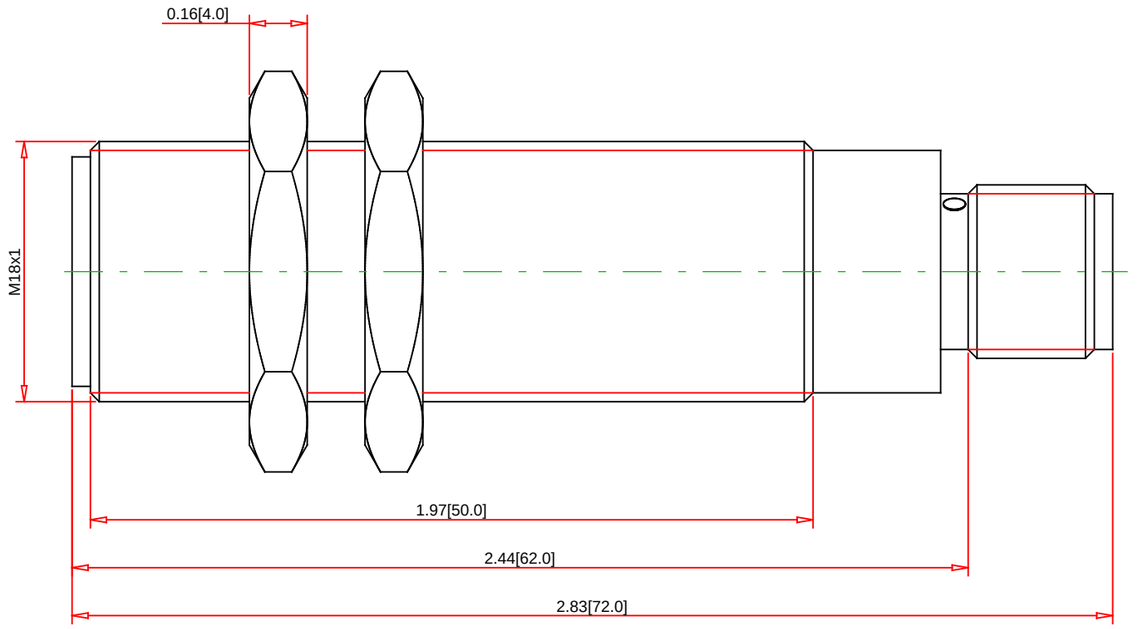

Note:
- Drawings Not To Scale
- Drawings Subject to Change Without Notice
- Dimensions are inches next to [Millimeters]

Part No.:

XU5M18MB230K

Telemecanique Sensors
1875 Founders Drive
Dayton, OH 45420-4017
Customer Care Center : 1-800-435-2121
Web : www.tesensors.com

Technical Information:

Diffuse with Background Suppression:	
Diffuse:	400.0 mm (15.7 in)
Polarized Retroreflective:	
Thru Beam:	
Retroreflective:	
Circuit Type:	
Output Mode:	Dark Operate
Power:	AC/DC
Voltage Range:	24-240
Max Load:	200 mA
Max Switching Frequency :	25 Hz
Temp Range:	-25° to 55° C (-13° to 131° F)
NEMA Type:	4X (indoor use only)
IP Rating:	67
Standards:	UL, CE Rohs

Specification:

Sensor Type:	Proximity Diffuse
Description:	Photoelectric, Proximity Diffuse, 18 mm Barrel, 24-240
Body Style:	Barrel
Diameter:	mm
Housing Material:	Metal - NPB
Face Material:	PMMA
Adjustment:	Yes
Cable Size:	
Connector Type:	3-pin U20
Special Features:	