Product data sheet
Characteristics

XCMD2106C12
Limit switch, Limit switches XC Standard, XCMD, cat's whisker, 1NC+1 NO, snap, M12



Main

Range of product	Telemecanique Limit switches XC Standard
Series name	Standard format
Product or component type	Limit switch
Device short name	XCMD
Sensor design	Miniature
Body type	Plug-in body
Head type	Multi-directional head
Material	Metal
Body material	Zamak
Head material	Zamak
Fixing mode	By the body
Movement of operating head	Multi-directional
Type of operator	Spring return cat"s whisker
Type of approach	Multi-directional approach
Number of poles	2
Contacts type and composition	1 NC + 1 NO
Contact operation	Snap action

Complementary

Switch actuation	By any moving part
Electrical connection	Male connector M12, 5 pins
Contacts insulation form	Zb
Positive opening	Without
Minimum force for tripping	0.1 N
Maximum actuation speed	3.28 ft/s (1 m/s)
[Ie] rated operational current	0.22 A 50 V, DC-13 EN/IEC 60947-5-1 appendix A 3 A at 50 V, AC-15 conforming to EN/IEC 60947-5-1 appendix A
[Ithe] conventional enclosed thermal current	4 A
[Ui] rated insulation voltage	60 V 3)IEC 60947-5-1
Maximum resistance across terminals	25 mOhm conforming to IEC 60255-7 category 3
[Uimp] rated impulse withstand voltage	0.8 KV IEC 60664 0.8 kV IEC 60947-1
Short-circuit protection	4 A cartridge fuse gG
Electrical durability	5000000 Cycles, DC-13, 24 V, 3 W, operating rate <60 cyc/mn, load factor: 0.5 conforming to IEC 60947-5-1 appendix C 5000000 cycles, DC-13, 48 V, 2 W, operating rate <60 cyc/mn, load factor: 0.5 conforming to IEC 60947-5-1 appendix C
Mechanical durability	5000000 cycles
Width	1.18 in (30 mm)
Height	1.97 in (50 mm)
Maximum Depth	0.63 in (16 mm)
Net Weight	0.19 lb(US) (0.085 kg)

The information provided in this documentation contains general descriptions and/or technical characteristics of the performance of the products contained herein.
This documentation is not intended as a substitute for and is not to be used for determining suitability or reliability of these products for specific user applications.
It is the duty of any such user or integrator to perform the appropriate and complete risk analysis, evaluation and testing of the products with respect to the relevant specific application or use thereof.
Neither Schneider Electric Industries SAS nor any of its affiliates or subsidiaries shall be responsible or liable for misuse of the information contained herein.

Environment

Shock resistance	25 gn for 18 ms conforming to IEC 60068-2-27
Vibration resistance	5 gn 10…500 Hz)IEC 60068-2-6
IP degree of protection	IP66 conforming to IEC 60529 IP67 conforming to IEC 60529 IP68 conforming to IEC 60529
IK degree of protection	IK06 conforming to EN 62262
Electrical shock protection class	Class I IEC 61140 Class I NF C 20-030
Ambient air temperature for operation	-13…158 °F (-25…70 °C)
Ambient air temperature for storage	-40…158 °F (-40…70 °C)
Protective treatment	TC
Product certifications	CSA UL CCC
Standards	EN/IEC 60204-1 EN/IEC 60947-5-1 CSA C22.2 No 14 UL 508

Ordering and shipping details

Category	22413 - LIMIT SWITCH, IEC, MINIATURE
Discount Schedule	T
GTIN	03389110221428
Nbr. of units in pkg.	1
Package weight(Lbs)	0.7 lb(US) (0.32 kg)
Returnability	No
Country of origin	ID

Offer Sustainability

Sustainable offer status	Green Premium product
California proposition 65	WARNING: This product can expose you to chemicals including: Diisononyl phthalate (DINP), which is known to the State of California to cause cancer, and Di-isodecyl phthalate (DIDP), which is known to the State of California to cause birth defects or other reproductive harm. For more information go to www.P65Warnings.ca.gov
REACh Regulation	REACh Declaration
EU RoHS Directive	Pro-active compliance (Product out of EU RoHS legal scope) EU RoHS Declaration
Mercury free	Yes
RoHS exemption information	Yes
Environmental Disclosure	Product Environmental Profile
Circularity Profile	End Of Life Information

Contractual warranty

Warranty	18 months

Dimensions

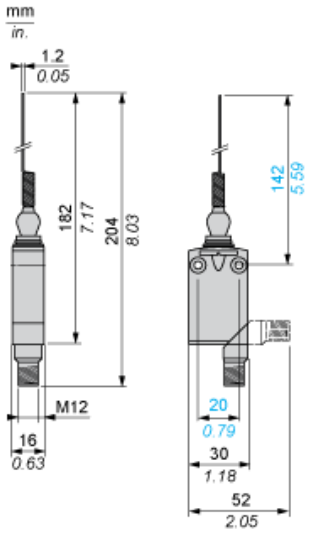
mm
in.
1.2
0.05
182
7.17
204
8.03
M12
16
0.63
142
5.59
20
0.79
30
1.18
52
2.05

Setting-up

Plunger or Multi-directional Heads

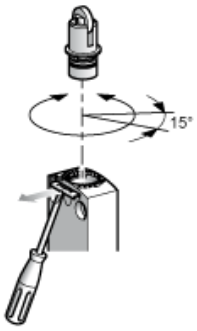

Wiring Diagram

2-pole NC + NO Snap Action + Integral M12 5-pin Connector

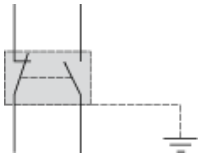

Wiring Diagram

5-pin, M12, 4A-60V

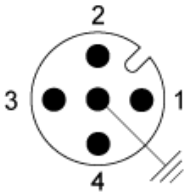

1 - NC
2 :
3 - NO
4 :
5 : Grounding

Characteristics of Actuation

Switch Actuation by Any Moving Part

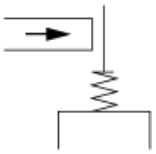

Functionnal Diagram

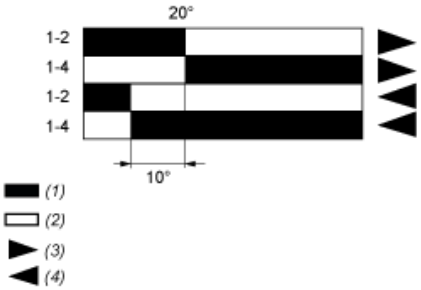

(1) Closed
(2) Open
(3) Tripping
(4) Resetting