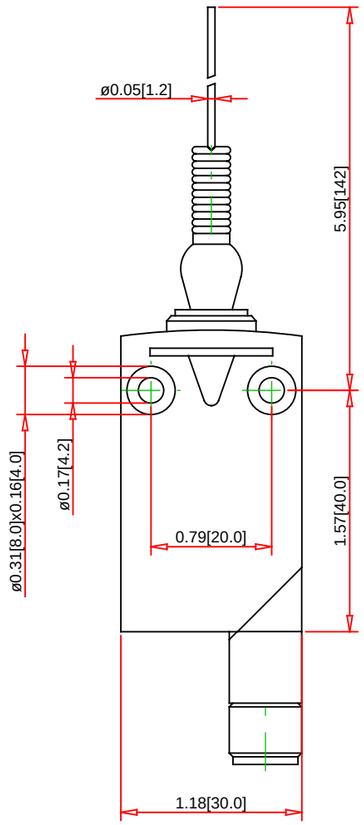

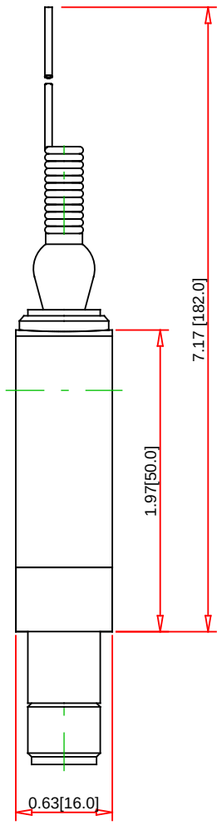

Note:
- Drawings Not To Scale
- Drawings Subject to Change Without Notice
- Dimensions are inches next to [Millimeters]

Part No.:

XCMD2106C12

Telemecanique Sensors
1875 Founders Drive
Dayton, OH 45420-4017
Customer Care Center : 1-800-435-2121
Web : www.tesensors.com

Technical Information:

Terminal Type:	
Enclosure Rating:	NEMA 1/2/4X/6/6P/12/13; IP66/67/68
Approvals:	UL # E164353 - CSA # 164581 - CE Marked
Weight:	0.160 kg (0.353 lb)
Conforming to Standards:	CENELEC EN 50047
RoHS:	Yes
Operating Temperature Range:	-13 to 159 ° F
Shock Resistance:	25G
Vibration Resistance:	5G
Max. Actuation Speed :	1.0 m/s
Repeat Accuracy:	
Operating Torque/Force:	14.16 Inch-Ounces (0.10Nm)

Specification:

Description:	XCMD Limit Switch Omnidirectional cat whisker
Body Style/Type Description:	IEC OsiSense Limit Switches XCMD Miniature Modular 30mm Metal Body
Head Type:	ZCE06 Omnidirectional cat whisker
Lever Arms:	
Body with Contact Type:	ZCMD21 2-pole N.O./N.C. snap action
Conduit Thread:	ZCMD21C12 Connector M12 5-pin
Ampere Rating Continuous:	4A
Maximum Voltage Rating:	240VAC/250VDC
Actuation:	Any Direction
Actuator Action:	Momentary
Lever Arm Length:	
Roller Dimension:	
Roller Material:	
Contact Configuration:	1 N.O./1 N.C.
Contact Operation:	Snap Action
Connection Type:	M12 Connector (5-Pin)
Head Material:	Zamak
Positive Opening:	No
Cable Length:	