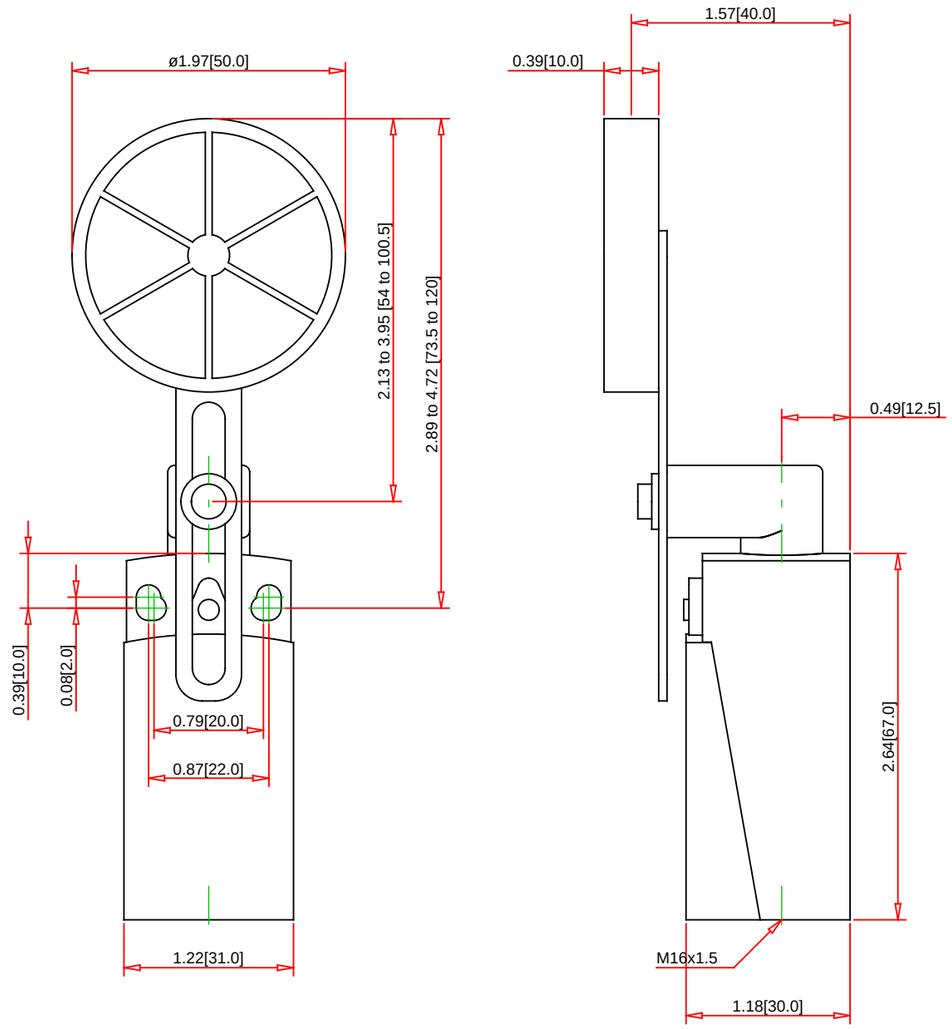

Note:
- Drawings Not To Scale
- Drawings Subject to Change Without Notice
- Dimensions are inches next to [Millimeters]

Part No.:

XCKP2149P16

Telemecanique Sensors
1875 Founders Drive
Dayton, OH 45420-4017
Customer Care Center : 1-800-435-2121
Web : www.tesensors.com

Technical Information:

Terminal Type:	Screw Clamp
Enclosure Rating:	NEMA 1/2/4/6/12/13; IP66/67
Approvals:	UL # E164353 - CSA #164581 - CE Marked
Weight:	0.155 kg (0.342 lb)
Conforming to Standards:	CENELEC EN 50047
RoHS:	Yes
Operating Temperature Range:	-13 to 158 ° F
Shock Resistance:	50G
Vibration Resistance:	25G
Max. Actuation Speed :	1.5 m/s
Repeat Accuracy:	
Operating Torque/Force:	14.16 Inch-Ounces (0.10Nm)

Specification:

Description:	XCKP Limit Switch rotary head variable length plastic roller lever, 50mm dia.
Body Style/Type Description:	IEC OsiSense Compact Modular 31mm wide Plastic Limit Switches
Head Type:	ZCE01 Rotary+ZCY49 Variable length plastic roller lever, 50mm dia.
Lever Arms:	ZCY49 Variable length plastic roller lever, 50mm dia.
Body with Contact Type:	ZCP21 2-pole N.O./N.C. Snap Action
Conduit Thread:	ZCPEP16 ISO M16x1.5
Ampere Rating Continuous:	10A
Maximum Voltage Rating:	240VAC/250VDC
Actuation:	CW and CCW
Actuator Action:	Momentary
Lever Arm Length:	56 to 100.5mm
Roller Dimension:	50 x 10mm
Roller Material:	Thermoplastic
Contact Configuration:	1 N.O./1 N.C.
Contact Operation:	Snap Action
Connection Type:	Conduit Entrance (ISO M16x1.5)
Head Material:	Zamak
Positive Opening:	Yes
Cable Length:	