Product data sheet
Characteristics

XUSL4E30H121N
XUSL type 4 - For hand protection - Std sensing range - Hp = 1210 mm, R=30mm

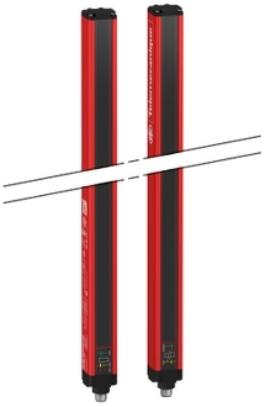

Main

Range of product	Telemecanique Safety light curtains XUSL
Product or component type	Safety light curtain type 4
Device short name	XUSL4E
Output type	2 safety outputs OSSD solid-state PNP arc suppression)
Product specific application	For hand protection
[R] Resolution	1.18 in (30 mm)
[Sn] nominal sensing distance	0.00…39.37 Ft (0…12 m) by cabling 0.00…13.12 ft (0…4 m) by cabling
[Hp] Height protected	47.64 in (1210 mm)
Number of beams	61
Type of start / restart	Manual Automatic
External Device Monitoring (EDM)	Selected by wiring

Complementary

Detection system	Transmitter-receiver system
Response time	15.5 ms
Kit composition	Adjustable mounting bracket(s) 1 receiver(s) 1 transmitter(s) 1 user guide with certificate of conformity on CD-ROM
[EAA] effective aperture angle	2.5 ° at 3 m
Emission	IR LED 0.000037402 in (950 nm)
[Us] rated supply voltage	24 V DC +/- 20 %
Supply	Power supply IEC 61496-1 Power supply IEC 60204-1
[Ie] rated operational current	2 A
Current consumption	42 mA no-load transmitter 83 mA no-load receiver 42 mA transmitter 900 mA with maximum load receiver
Output current limits	0.4 A safety outputs OSSD
Output voltage	24 V
Output circuit type	DC
Maximum voltage drop	<0.5 V
Local signalling	1 multi-colour LED transmitter 2 dual colour LEDs receiver
Electrical connection	1 male connector M12 5 pins transmitter 1 male connector M12 8 pins receiver
Function available	Test Muting through external safety module XPSLCMUT1160 LED display of operating modes and faults
Marking	CE
Material	Aluminium casing Polycarbonate front panel Polypropylene end caps
Housing colour	Red RAL 3000
Fixing mode	By fixing brackets

The information provided in this documentation contains general descriptions and/or technical characteristics of the performance of the products contained herein.
This documentation is not intended as a substitute for and is not to be used for determining suitability or reliability of these products for specific user applications.
It is the duty of any such user or integrator to perform the appropriate and complete risk analysis, evaluation and testing of the products with respect to the relevant specific application or use thereof.
Neither Schneider Electric Industries SAS nor any of its affiliates or subsidiaries shall be responsible or liable for misuse of the information contained herein.

Net Weight	5.07 lb(US) (2.3 kg)
Offer type	Standard distance

Environment

Directives	98/37/EEC - machinery 89/655/EEC - work equipment 89/336/EEC - electromagnetic compatibility
Product certifications	CE TÜV CULus
Safety level (correctly wired)	Type 4 IEC 61496-1 SIL 3 IEC 61508 SILCL 3 IEC 62061 Category 4 EN/ISO 13849-1 PL = e EN/ISO 13849-1
Optical characteristic	Resistance to light disturbance EN/IEC 61496-2
Mission time	20 year(s)
Safety reliability data	PFHd = 1.54E-8 1/h IEC 61508
Ambient air temperature for operation	-22…131 °F (-30…55 °C) 14…131 °F (-10…55 °C)
Ambient air temperature for storage	-13…158 °F (-25…70 °C) -31…158 °F (-35…70 °C)
Relative humidity	0…95 % without condensation
IP degree of protection	IP65 IP67
Shock resistance	10 gn 16 ms IEC 61496-1
Vibration resistance	0.35 +/- 0.05 mm 10…55 Hz)IEC 61496-1

Ordering and shipping details

Category	22455 - LIGHT CURTAINS - XUSL
Discount Schedule	DS2
GTIN	00785901979845
Nbr. of units in pkg.	1
Package weight(Lbs)	9.77 lb(US) (4.43 kg)
Returnability	Yes
Country of origin	IT

Packing Units

Unit Type of Package 1	PCE
Package 1 Height	52.01 in (132.1 cm)
Package 1 width	7.87 in (20 cm)
Package 1 Length	5.71 in (14.5 cm)
Unit Type of Package 2	PAL
Number of Units in Package 2	2
Package 2 Weight	232.10 lb(US) (105.28 kg)
Package 2 Height	35.43 in (90 cm)
Package 2 width	50.00 in (127 cm)
Package 2 Length	110.24 in (280 cm)

Offer Sustainability

Sustainable offer status	Green Premium product
California proposition 65	WARNING: This product can expose you to chemicals including: Diisononyl phthalate (DINP), which is known to the State of California to cause cancer, and Di-isodecyl phthalate (DIDP), which is known to the State of California to cause birth defects or other reproductive harm. For more information go to www.P65Warnings.ca.gov
REACh Regulation	REACh Declaration
REACh free of SVHC	Yes
EU RoHS Directive	Pro-active compliance (Product out of EU RoHS legal scope) EU RoHS Declaration
Toxic heavy metal free	Yes
Mercury free	Yes
RoHS exemption information	Yes
Environmental Disclosure	Product Environmental Profile
Circularity Profile	End Of Life Information

Contractual warranty

Warranty	18 months

Dimensions Drawings

Dimensions

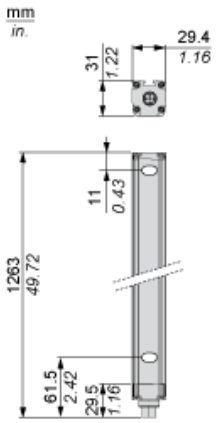

Brackets Dimensions

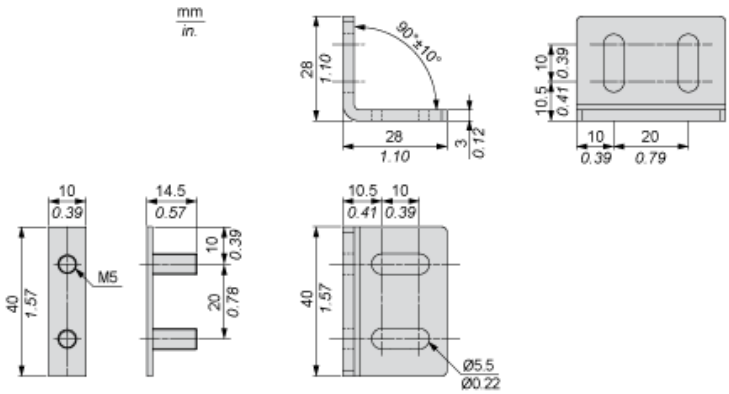

Mounting and Clearance

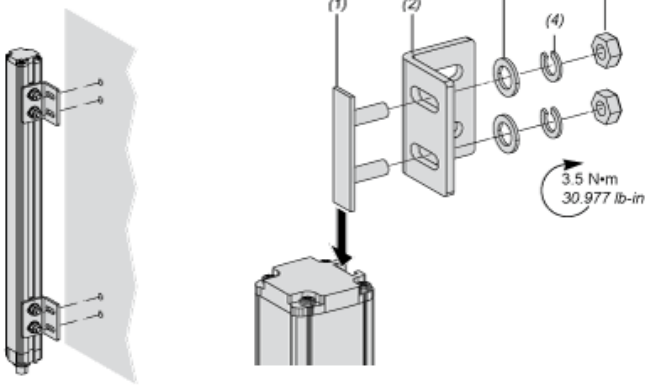

(1) Insert
(2) Bracket
(3) Washer
(4) Spring washer
(5) Nut

Wiring Diagrams

Transmitter Connections

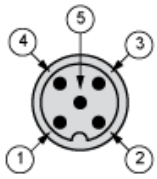

(1) +24 Vdc
(2) Configuration_0
(3) 0 Vdc
(4) Configuration_1
(5) FE

Transmitter configurations and operating modes

	High range option	Low range option	Transmitter in Test state	Forbidden wiring
Pin 4 : Configuration_1	24 V	0 V	0 V	24 V
Pin 2 : Configuration_0	0 V	24 V	0 V	24 V

Receiver Connections

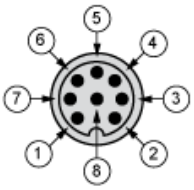

(1) OSSD1
(2) + 24 V
(3) OSSD2
(4) Configuration_A
(5) K1_K2 Feeback/Restart
(6) Configuration_B
(7) 0 Vdc
(8) FE

Receiver Configurations and Operating Modes

Automatic Start/Restart

Without External Device Monitoring (EDM) feedback loop

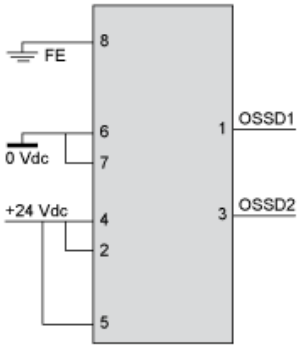

With External Device Monitoring (EDM) feedback loop

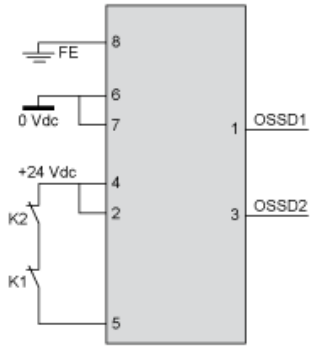

Manual Start/Restart

Without External Device Monitoring (EDM) feedback loop

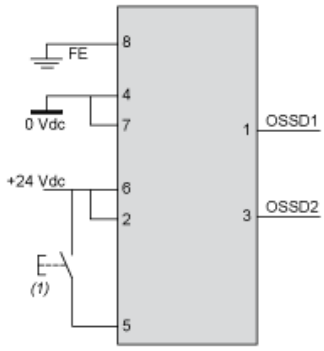

(1) Restart

With External Device Monitoring (EDM) feedback loop

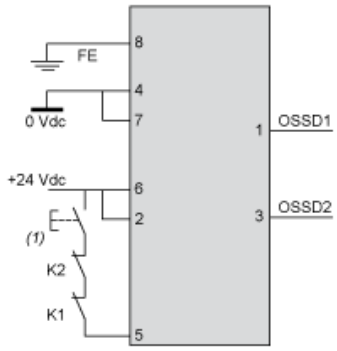

(1) Restart

Connecting to a Safety Interface

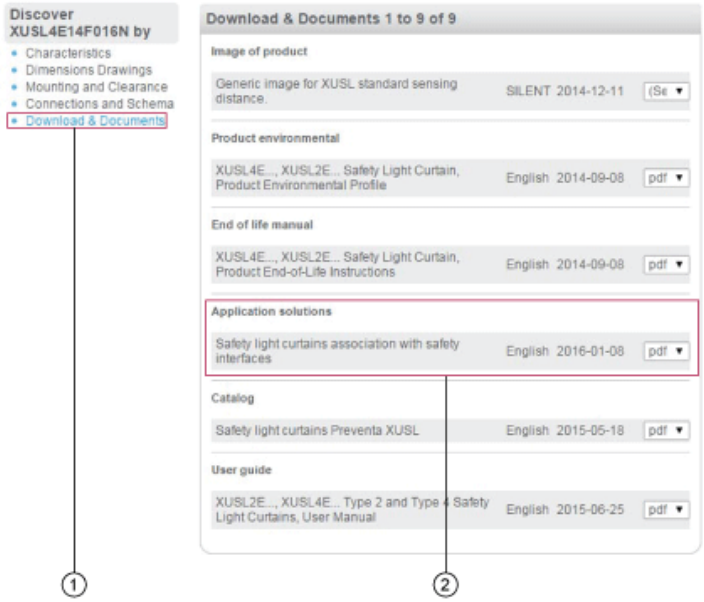

1 : Click on Download & Documents
2 : Click on Application solutions

To have all connection schematics concerning our safety module, select "download and document" and download the file "Safety light curtains association with safety interfaces"