Product data sheet
Characteristics

XMLP030RD23F
Electronic pressure sensors, Pressure sensors XM, transmitter 30 PSI, 4...20 mA, 1/4 18NPT male, FPM, M12



Main

Range of product	OsiSense XM
Product or component type	Electronic pressure sensors
Pressure sensor type	Pressure transmitter
Pressure sensor name	XMLP
Electrical circuit type	Control circuit
Pressure sensor size	30 psi (206.84 kPa)
Local display	Without
Controlled fluid	Fresh water 32…257 °F (0…125 °C)) Air 5…257 °F (-15…125 °C)) Gas (-15…125 °C) Hydraulic oil 5…257 °F (-15…125 °C))
Fluid connection type	1/4" - 18 NPT (male)
Electrical connection	1 male connector M12 4 pins
[Us] rated supply voltage	12...24 V DC SELV 7…33 V)
Current consumption	< 23 mA
Type of output signal	Analogue
Analogue output function	4...20 mA, 2-wire
Quantity per set	Set of 1
Type of packing	Individual

Complementary

Pressure setting range	0…30 psi (0.00…206.84 kPa)
Maximum permissible accidental pressure	109 psi (751.53 kPa)
Destruction pressure	145 psi (999.74 kPa)
Materials in contact with fluid	Fluorocarbon FPM Stainless steel AISI 316L Ceramic
Operating position	Any position
Protection type	Reverse polarity Load short-circuit
Electromagnetic compatibility	Susceptibility to electromagnetic fields conforming to EN/IEC 61000-4-3 10 V/m 80...1000 MHz Radiated RF fields conforming to EN/IEC 61000-4-6 10 V 0.15...80 MHz Electrostatic discharge immunity test conforming to EN/IEC 61000-4-2 8 kV air, 4 kV contact 1.2/50 µs shock waves immunity test EN/IEC 61000-4-5 1 kV 42 Ohm Immunity to magnetic fields conforming to EN/IEC 61000-4-8 100 A/m 50 Hz Electrical fast transient/burst immunity test conforming to EN/IEC 61000-4-4 4 kV
[Uimp] rated impulse withstand voltage	0.5 kV
Response time on output	<= 2 ms 10...90 % of full scale
Measurement accuracy	+/- 0.5 % of the measuring range
Resolution	0.1 % of the measuring range
Drift of the sensitivity	+/- 0.02 % of measuring range/°K
Drift of the zero point	+/- 0.02 % of measuring range/°K
Long term stability	+/- 0.25 % of the measuring range
Mechanical durability	10000000 cycles
Net Weight	0.17 lb(US) (0.075 kg)

The information provided in this documentation contains general descriptions and/or technical characteristics of the performance of the products contained herein.
This documentation is not intended as a substitute for and is not to be used for determining suitability or reliability of these products for specific user applications.
It is the duty of any such user or integrator to perform the appropriate and complete risk analysis, evaluation and testing of the products with respect to the relevant specific application or use thereof.
Neither Schneider Electric Industries SAS nor any of its affiliates or subsidiaries shall be responsible or liable for misuse of the information contained herein.

Diameter	1.02 in (26 mm)
Length	1.19 in (30.2 mm)

Environment

Standards	EN/IEC 61326-2-3 NSF ANSI 61
Product certifications	RCM EAC CE CULus
Ambient air temperature for operation	-22…185 °F (-30…85 °C)
Ambient air temperature for storage	-58…212 °F (-50…100 °C)
Vibration resistance	20 gn 10…2000 Hz) EN/IEC 60068-2-6
Shock resistance	100 gn 11 ms EN/IEC 60068-2-27
IP degree of protection	IP65 conforming to EN/IEC 60529 IP67 conforming to EN/IEC 60529 IP69K conforming to DIN 40050

Ordering and shipping details

Category	21561 - XMLK,XMLP PRESSURE TRANSMITTERS
Discount Schedule	DS2
GTIN	00785901520832
Nbr. of units in pkg.	1
Package weight(Lbs)	1 lb(US) (0.45 kg)
Returnability	No
Country of origin	CH

Packing Units

Unit Type of Package 1	PCE
Package 1 Height	1.61 in (4.1 cm)
Package 1 width	1.77 in (4.5 cm)
Package 1 Length	3.35 in (8.5 cm)

Offer Sustainability

Sustainable offer status	Green Premium product
California proposition 65	WARNING: This product can expose you to chemicals including: Diisononyl phthalate (DINP), which is known to the State of California to cause cancer, and Di-isodecyl phthalate (DIDP), which is known to the State of California to cause birth defects or other reproductive harm. For more information go to www.P65Warnings.ca.gov
REACh Regulation	REACh Declaration
EU RoHS Directive	Pro-active compliance (Product out of EU RoHS legal scope) EU RoHS Declaration
Mercury free	Yes
RoHS exemption information	Yes
Environmental Disclosure	Product Environmental Profile

XMLP030RD23F

Dimensions

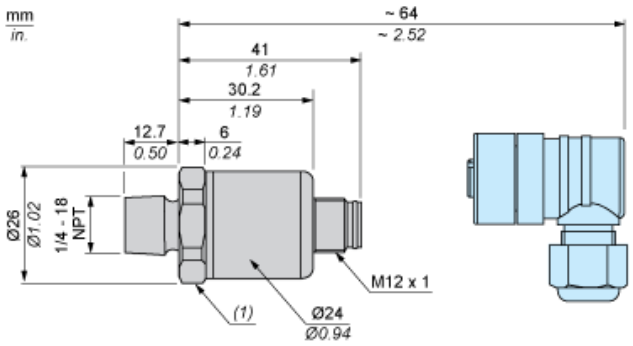

(1) SW24 tightening torque ≤ 25 N.m / 221 lb-in

Connection and Schema

Wiring Diagram

2-Wire Technique (4-20 mA)

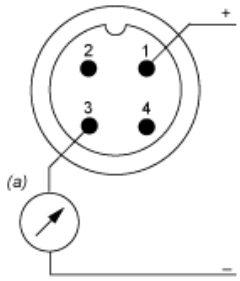

(a) I out

Performance Curves

Curves

